Q'nique15

Copyright July 27, 2020

Grace Company

(Reproduction Prohibited)

Version 4.0

MADE BY Grace

Important Safety Instructions

Please read all these Safety Instructions before using this machine.

DANGER - To reduce the risk of electric shock, do not leave the machine unattended when plugged in. Always unplug this machine from the electric outlet immediately after using and before cleaning.

WARNING - To reduce the risk of burns, fire, electric shock, or injury to persons:

- Do not allow this machine to be used as a toy. Pay close attention when this machine is used by or near children.
- Use this machine only for its intended use as described in this manual. Use only attachments recommended by the manufacturer as contained within this manual.
- Never operate this machine if it has a damaged cord or plug, it is not working properly, or it has been dropped, damaged, or dropped into water. Return the machine to the nearest authorized dealer or service center for examination, repair, or electrical or mechanical adjustment.
- Never operate the machine with any air openings blocked. Keep ventilation openings of the quilting machine free from the accumulation of lint, dust, and loose cloth.
- Never drop or insert any object into any opening.
- Do not use outdoors.
- Do not operate where aerosol (spray) products are being used or where oxygen is being administered.
- To disconnect, turn all controls to the off position, then remove the plug from the outlet by grasping the plug. Do not pull on cord.
- Keep fingers away from all moving parts. Special care is required around the quilting machine needle.
- Always use the proper needle plate. The wrong plate can cause the needle to break.
- Do not use bent needles.
- Do not pull or push fabric while stitching. It may deflect the needle causing it to break.
- Switch the quilting machine off when making any adjustments in the needle area, such as threading the needle, changing the needle, or changing the presser foot, etc.
- Always unplug the quilting machine from the electrical outlet when removing covers, lubricating, or when making any other user servicing adjustments mentioned in the instruction manual.

If using this machine in an area with inconsistent input power, it is recommended the surge protector is connected to a backup battery supply.

Connect this machine to a properly grounded outlet only. See "Grounding Instructions" (page 3).

SAVE THESE INSTRUCTIONS

Do not discard box or packaging

GROUNDING INSTRUCTIONS

This product must be grounded. In the event of malfunction or breakdown, grounding provides a path of least resistance for electric current to reduce the risk of electric shock. This product is equipped with a cord that has an equipment-grounding conductor and a grounding plug. Plug the cord from the quilting machine into a surge protector. The surge protector must be plugged into an appropriate outlet that is properly installed and grounded in accordance with all local codes and ordinances.

DANGER - Improper connection of the equipment-grounding conductor can result in a risk of electric shock. The conductor with insulation having an outer surface that is green with or without yellow stripes is the equipment-grounding conductor. If repair or replacement of the cord or plug is necessary, do not connect the equipment-grounding conductor to a live terminal. Check with a qualified electrician or serviceman if the grounding instructions are not completely understood, or if in doubt as to whether the product is properly grounded.

Do not modify the plug provided with the product - if it will not fit the outlet, have a proper outlet installed by a qualified electrician.

Grounding Methods

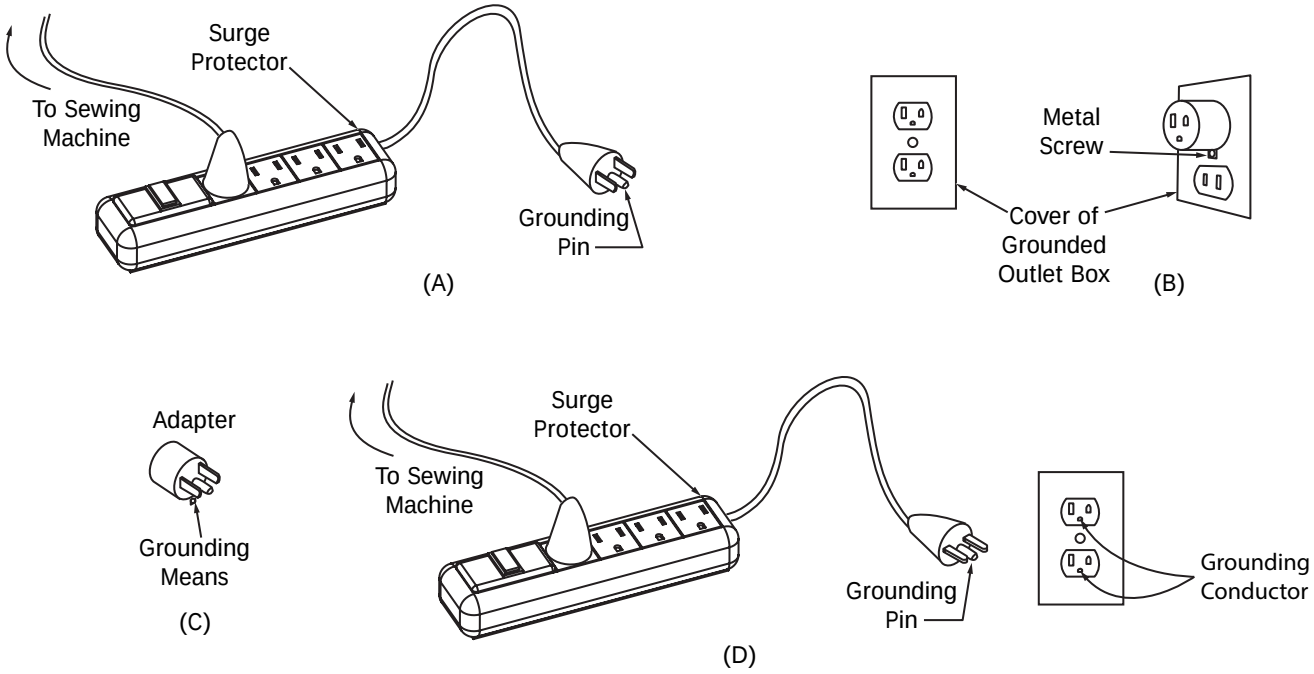

This product is for use on a nominal 120 V circuit, and has a grounding pin as illustrated above (A). A temporary adapter, shown in (B) and (C), may be used to connect this plug to a 2-pole receptacle (B) if a properly grounded outlet is not available. The temporary adapter should be used only until a properly grounded outlet can be installed by a qualified electrician. The green colored rigid ear, lug, and the like, extending from the adapter must be connected to a permanent ground such as a properly grounded outlet box cover. Whenever the adapter is used, it must be held in place by the metal screw.

A qualified electrician should be consulted if there is any doubt as to whether an outlet box is properly grounded.

Table Of Contents

Important Safety Instructions 2
Machine Specifications 5
Product Dimensions 5
Electrical 5
Features 5
Machine Layout 6
Ports and Plug-Ins 8
Included Parts 9
Included Tools 10

Out-of-the-Box Assembly

Aligning the Wheels 12
Assembling the Upper Encoder 16
Assembling the Lower Encoder 19
Attaching the Thread Mast 22
Connecting the Front Display 23
Turning the Machine On/Off 24

Preparing to Quilt

Winding the Bobbin 26
Loading the Bobbin Case 29
Threading the Machine 32
Final Checklist 40

Quilting

Using the Handlebar Controls 42
Choosing a Quilting Mode 43
Quilting in Precise Mode 44
Quilting in Cruise Mode 45
Using the Baste Quilting Mode 46
Quilting in Manual Mode 47
Adjusting Thread Tension 48
Using The Tools Menu 50
Tracking Stitch/Time Count 51
Customizing Machine Settings 52

Maintaining the Machine

Preparing the Oil Bottle 54
Oiling and Cleaning 55
Changing the Needle 59
Adjusting the Bobbin Cam 62
Adjusting the Hopping Foot 63
Adjustment Instructions 63
Removal Instructions 64
Installation Instructions 65
Reinstalling the Needle Plate 66
Removal Instructions 66
Installation Instructions 67

Repairs and Diagnostics

Repair Kit 70
Checking Firmware 71
Running Diagnostics 72
Encoder Test Instructions 73
Button Test Instructions 74
Sensor Test Instructions 75
Replacing the Encoder Spring 76
Reinstalling the Hook Holder 81
Removal Instructions 81
Installation Instructions 82
Timing the Machine 84

Appendix

Choosing Your Needle 89
Needle Style 89
Needle Sizes 89
Needle Diagram 90
Choosing Your Thread 91
Thread Type Guide 91
Thread Size 92
Thread Processing 92
Recommended Thread 93
Choosing Your Fabric and Batting 94
Fabric 94
Batting 94
Troubleshooting Guide 95
Index 97

Machine Specifications

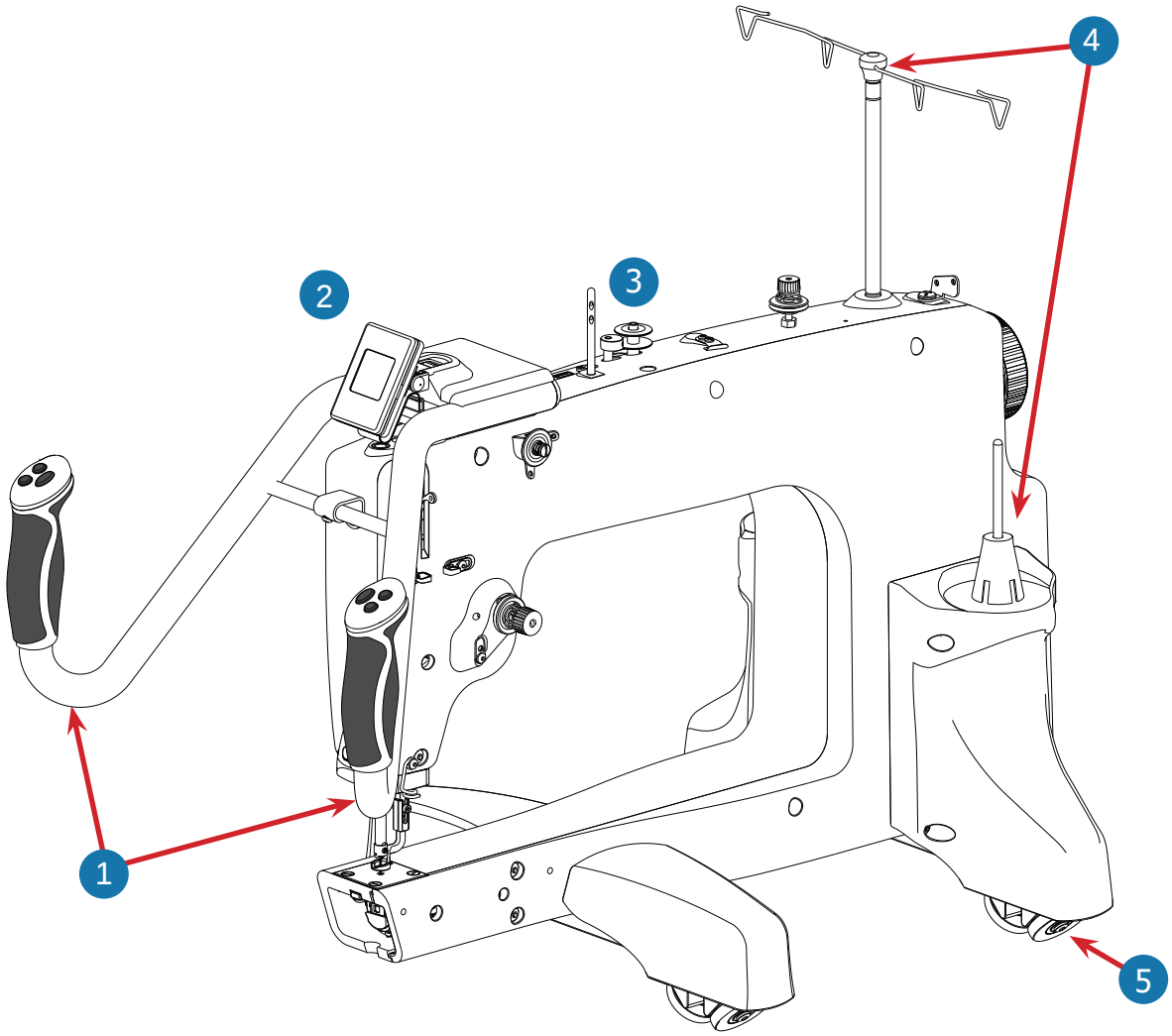

Product Dimensions

Body:

- Height: 480 mm, or 19 inches
- Width: 395 mm, or 15.5 inches
- Length: 585 mm, or 23 inches
- Weight: 19 kg, or 42 lbs

Quilting Arm:

- Height: 215.9 mm, or 8.5 inches
- Width: 381 mm, or 15 inches

Electrical

- Input Voltage: 110-220 VAC
- Peak Power Consumption: 300 W

Features

1. Ergonomic handles and handlebars for efficient, extended use (page 42)
2. OLED display to select menu options (page 43)
3. Built in bobbin winder (page 26)
4. Dual thread mast and stands for quilting and winding bobbin at the same time
5. Dual wheels for added stability (page 12)

- SPM range of 90 to 1800 stitches
- Regulated stitching

Machine Layout

Quilting Machine (Side View)

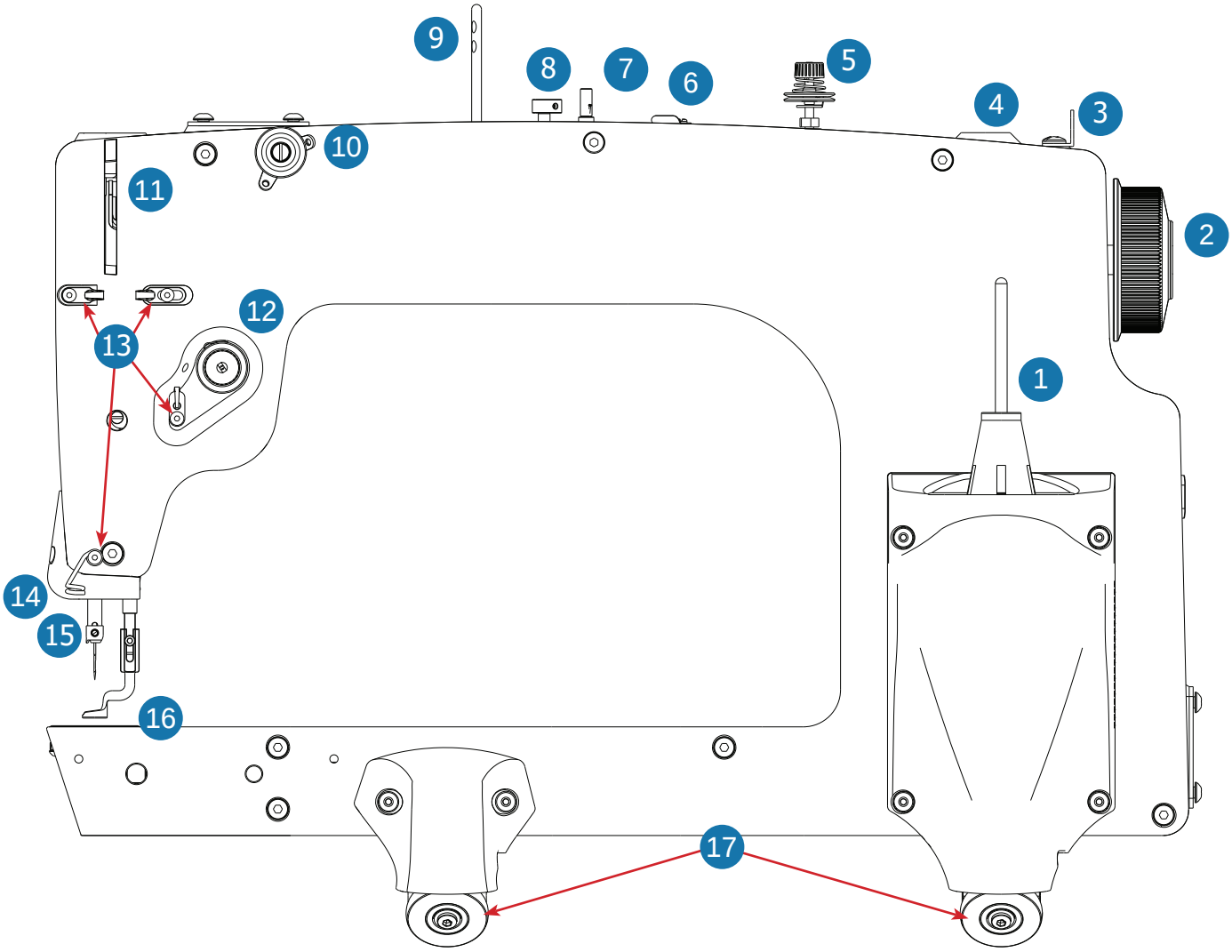

1 **Thread Stand** (page 32)
Holds a cone of thread.

2 **Hand Wheel**
Raises and lowers the needle bar.

3 **Bobbin Thread Guide** (page 26)
Positions thread for winding a bobbin.

4 **Thread Mast Base** (page 22)
Holds the thread mast.

5 **Bobbin Thread Tensioner** (page 26)
Tensions thread when winding a bobbin.

6 **Bobbin Thread Cutter** (page 26)
Cuts wound bobbin thread.

7 **Bobbin Stand** (page 26)
Holds the bobbin for winding.

8 **Bobbin Cam** (page 26)
Starts and stops bobbin winding.

9 **Thread Guide Rod** (page 32)
Positions thread when quilting.

10 **Small Thread Tensioner** (page 32)
Tensions thread when quilting.

11 **Take-Up Lever** (page 32)
Tensions thread when quilting.

12 **Large Thread Tensioner** (page 32)
Tensions thread as adjusted when quilting.

13 **Thread Guides** (page 32)
Positions thread when quilting.

14 **Lamp**
Lights up needle area when machine is on.

15 **Needle Bar** (page 59)
Holds the needle when quilting.

16 **Hopping Foot** (page 63)
Presses fabric down when quilting.

17 **Machine Wheels** (page 12)
Rides the bottom carriage rails to move machine up or down on the quilting frame.

Hook Assembly (Front View)

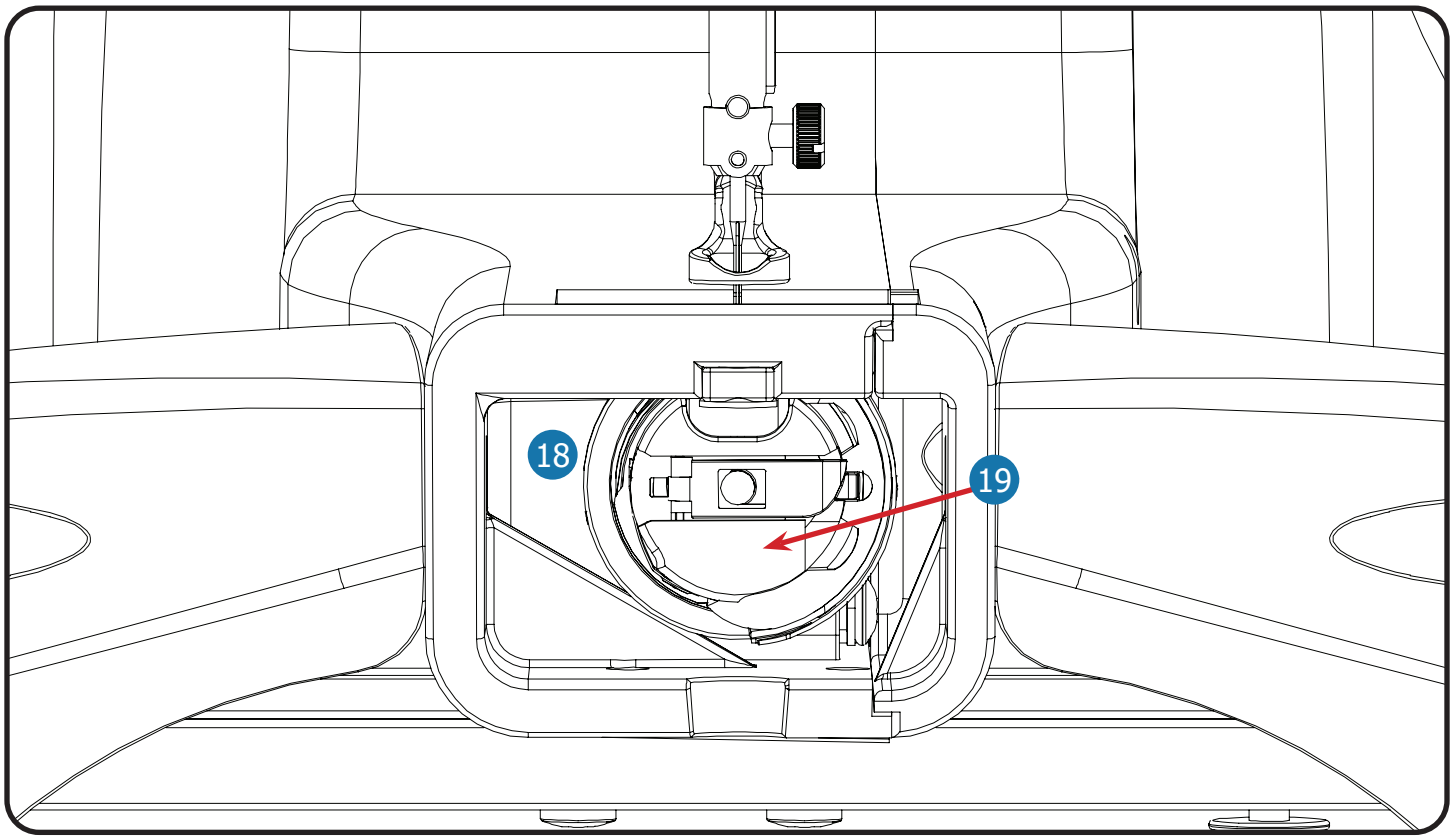

18 **Hook Assembly** (page 29)
Holds the bobbin case and hooks the top thread to create stitches.

19 **Bobbin Case** (page 29)
Holds large M class bobbin and controls bottom thread tension.

Ports and Plug-Ins

The ports and plug-ins illustrated below are located on the back of the machine.

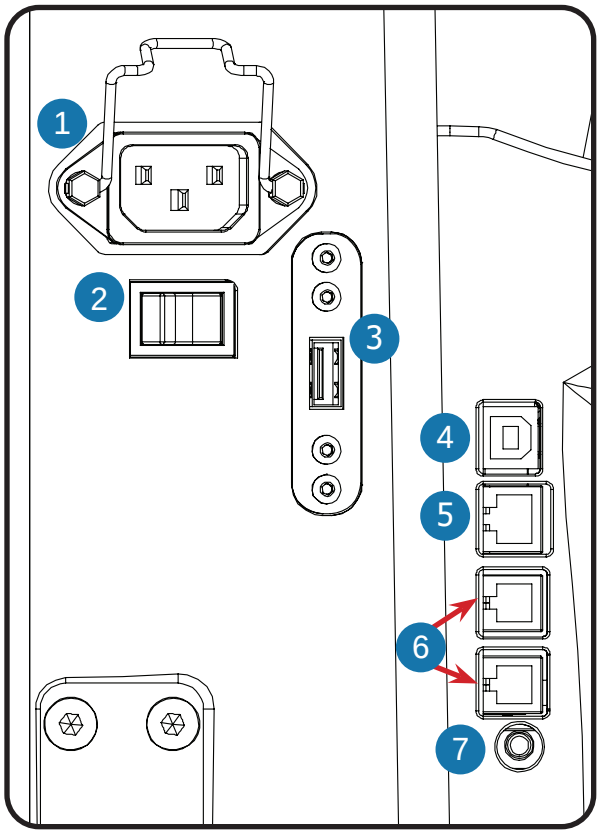

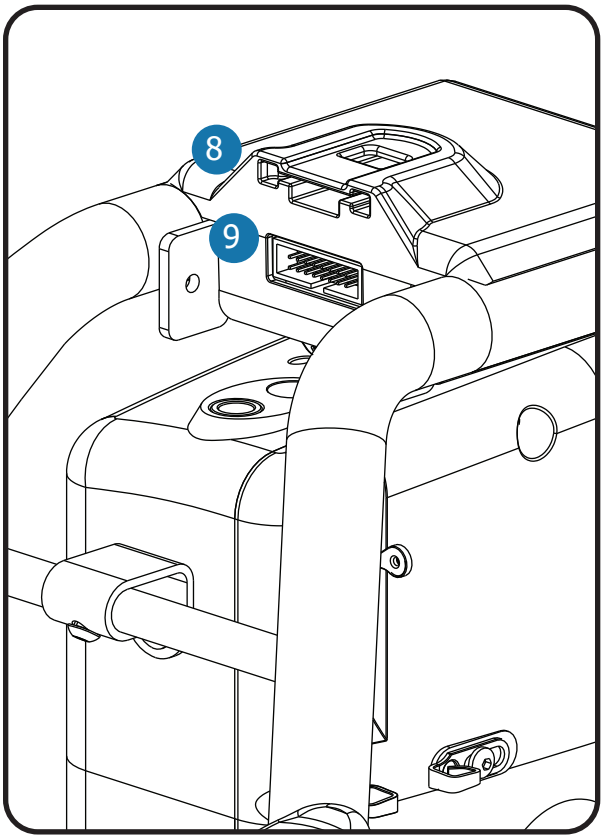

1 **Power Port with Retainer** (page 24)
Connects power cable to the machine.

2 **Power On/Off Switch** (page 24)
Turns machine on and off.

3 **Quilt Motion Tablet Port**
For optional automation accessory.

4 **USB Connector Port**
For updating only.

5 **Quilt Motion Control Port**
For optional automation accessory.

6 **Encoder Port** (page 16)
Connects encoders to machine.

7 **Foot Pedal Port**
For sit-down system.

8 **Display Clip Port** (page 23)
Connects display clip to machine.

9 **Display Cable Port** (page 23)
Connects display cable to machine.

Included Parts

Please make sure all pieces are included in your kit.

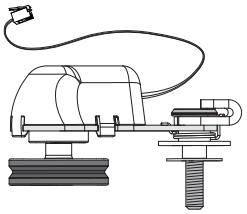

Upper Encoder
(silver spring)

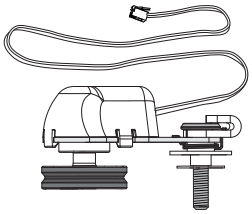

Lower Encoder
(black spring)

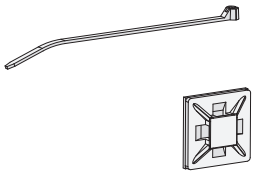

Zip Tie (2)
Zip Tie Mount (2)

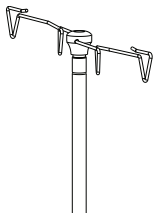

Thread Mast

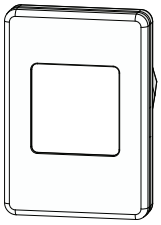

OLED Screen with Cable

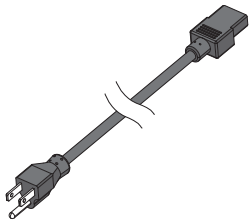

Power Cord

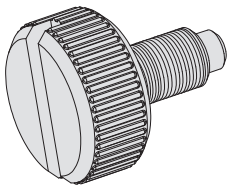

M3 Thumb Screw
(spare needle screw)

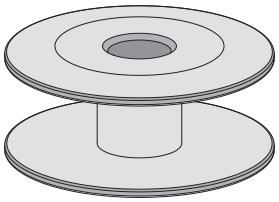

M Class Bobbin (3)
(one on bobbin stand, one in bobbin case)

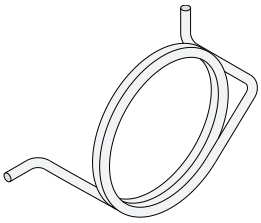

Upper Encoder Spring (silver)

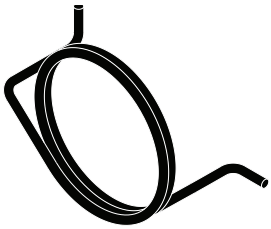

Lower Encoder Spring (black)

Size 16 Needle (10)

Size 18 Needle (10)
(one in machine)

Included Tools

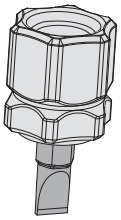

Flat-head Screwdriver

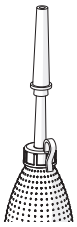

Oil Bottle

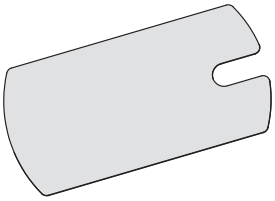

Hopping Foot Height Gauge

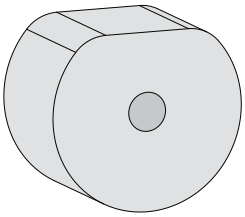

Timing Spacer

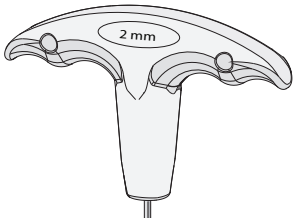

2 mm T-handle Allen Wrench

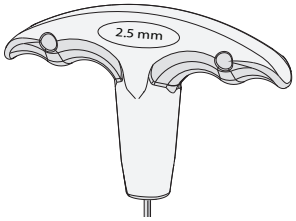

2.5 mm T-handle Allen Wrench

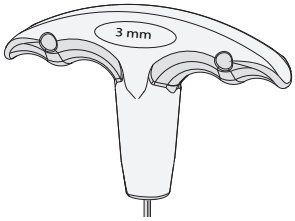

3 mm T-handle Allen Wrench

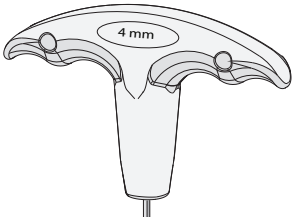

4 mm T-handle Allen Wrench

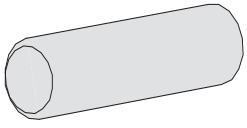

Needle Magnet

Lint Brush

Out-of-the-Box Assembly

The machine requires minimal assembly to get started! This section of the manual covers aligning the wheels, installing the encoders, setting up the thread mast, attaching the OLED display, and powering up the machine.

Aligning the Wheels ..... page 12

Assembling the Upper Encoder ..... page 16

Assembling the Lower Encoder ..... page 19

Attaching the Thread Mast ..... page 22

Connecting the Front Display ..... page 23

Turning the Machine On/Off ..... page 24

Note: Assemble your frame and bottom carriage before unpacking your quilting machine.

Tip: For additional help, scan the QR code below with the camera on your smart phone to visit our online support videos!

Aligning the Wheels

Set up the frame before assembling the machine.

Parts & Tools Needed:

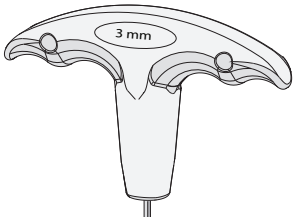

3 mm T-handle Allen Wrench

- Tape Measure (not included)

Instructions

The first step to preparing the quilting machine is to align the wheels so that the machine glides across the bottom carriage rails during use. The spacing between the wheels on the machine may need to be aligned to fit your carriage model. Please take the following steps:

1. Measure the distance between the two sides of the **bottom carriage**, from peak (shown in blue) to peak of each rail.

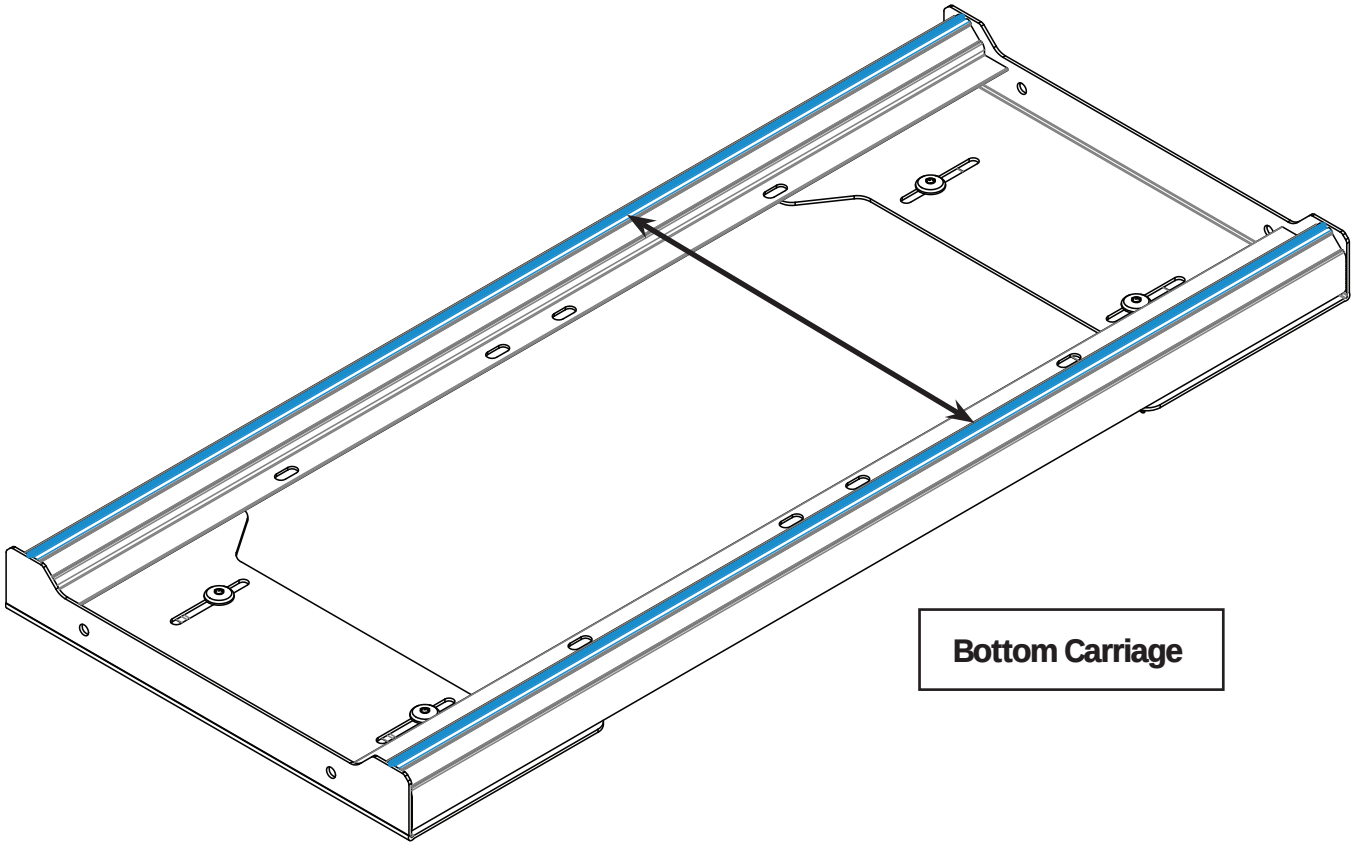

Bottom Carriage

2. Next measure the distance between the two rear **wheel block set screws**.

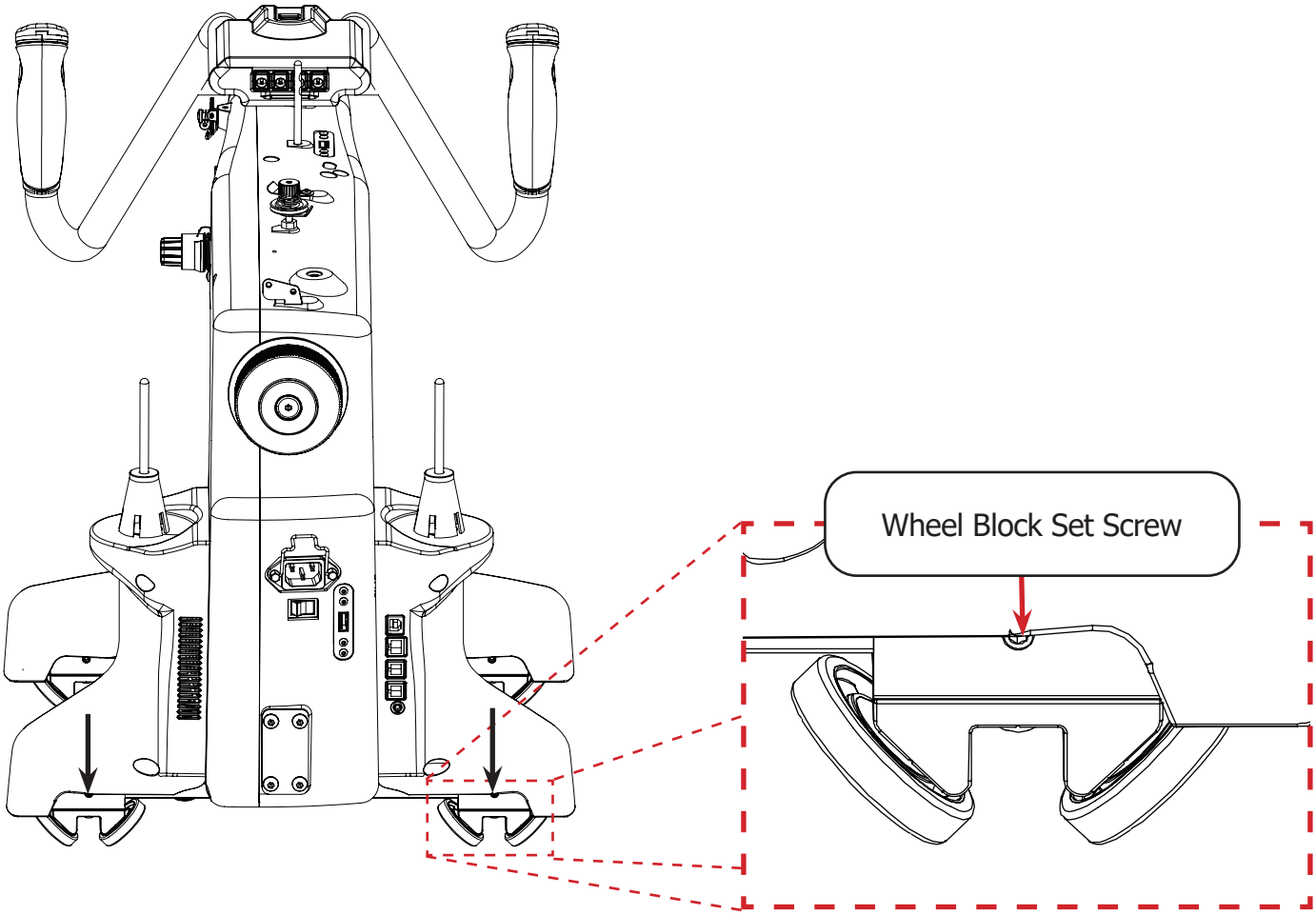

3. Compare the measurements.
   - If the distances are within an inch of each other, loosen the **two left wheel block set screws** with the 3 mm Allen wrench.

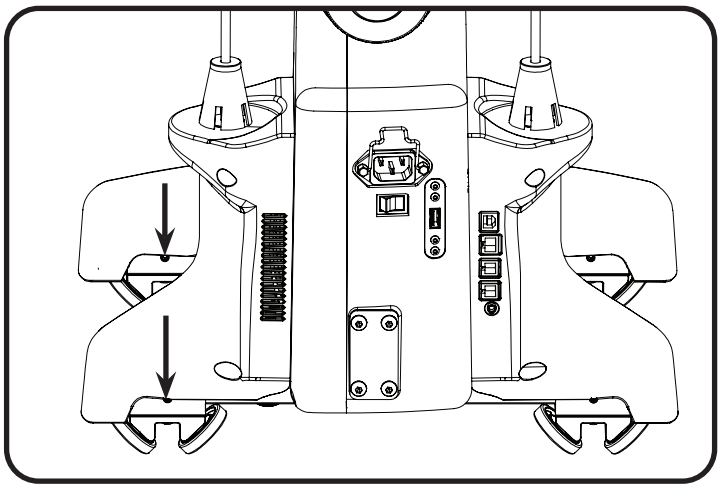

- If the difference between the measurements is greater than an inch, loosen all **four wheel block set screws** with the 3 mm Allen wrench.

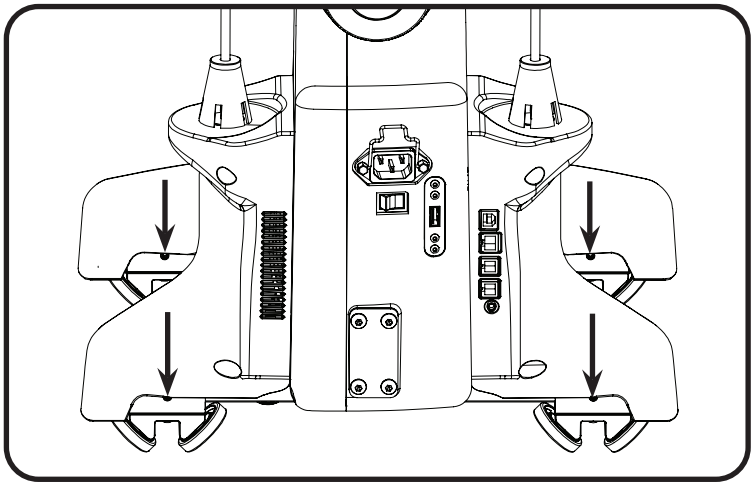

Note: The loosened **wheel blocks** are now able to shift from side to side.

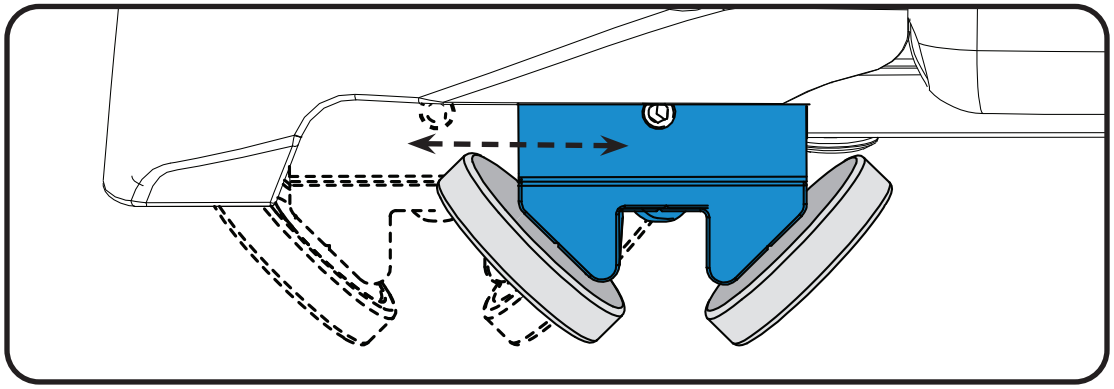

4. Adjust the two front wheels blocks so that the distance between the set screws matches the distance between the carriage rails. Do the same for the two back wheel blocks.
5. Carefully place your quilting machine on the bottom carriage.

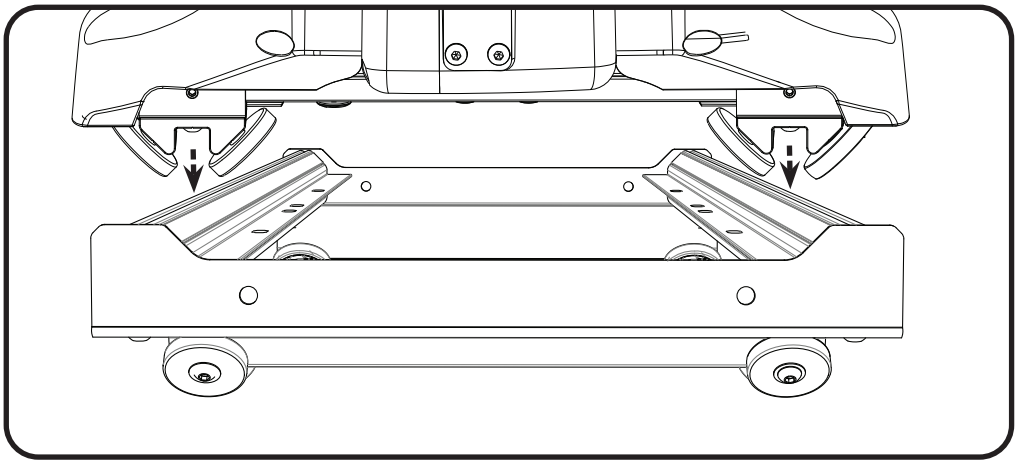

6. Slide machine up and down the carriage rails. Ensure all wheels contact with the rails and the machine moves smoothly.
7. Shift the machine so that it is centered over the rails.

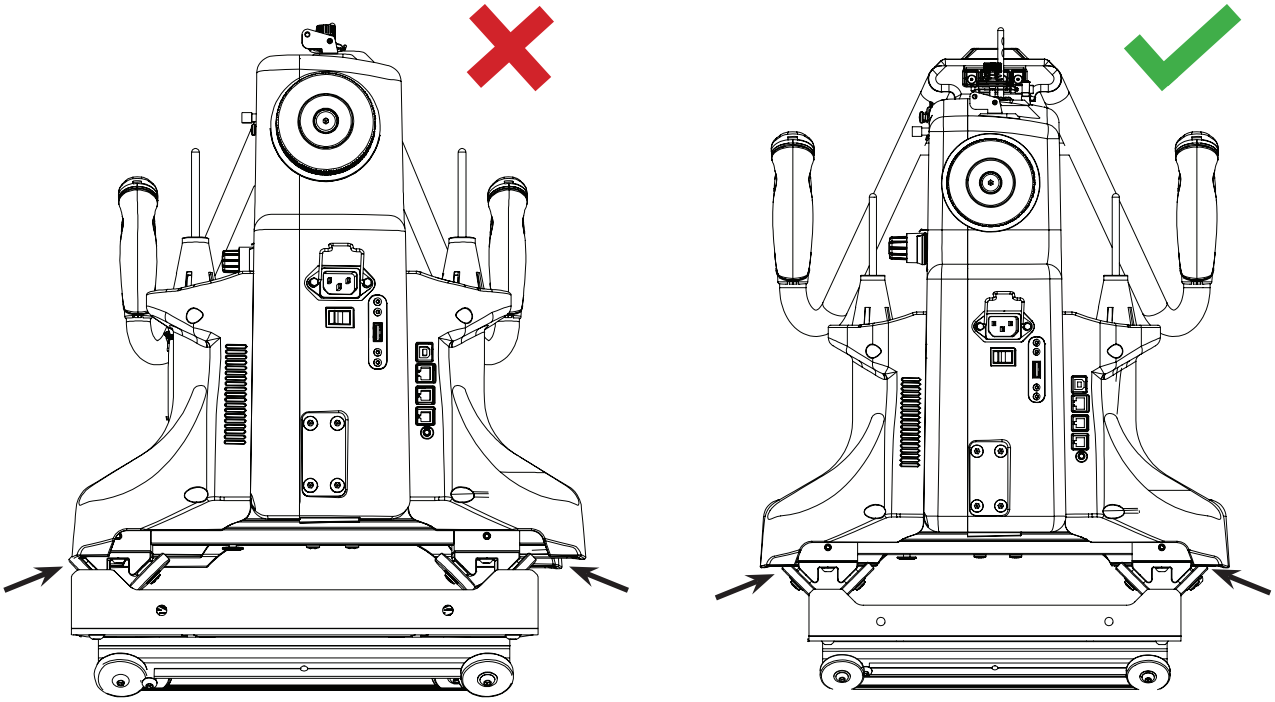

8. Re-tighten the **set screws** with the 3 mm Allen wrench.

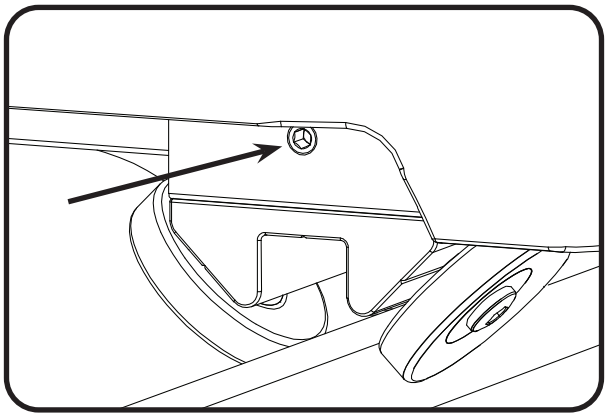

Assembling the Upper Encoder

Parts & Tools Needed:

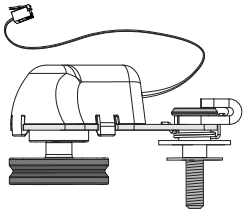

Upper Encoder
(silver spring)

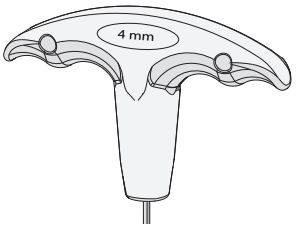

4 mm T-handle Allen Wrench

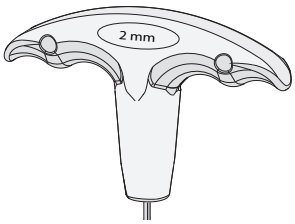

2 mm T-handle Allen Wrench

Instructions

The encoders make regulated stitching possible by tracking the position of the machine on the frame. The **upper encoder** has the short cable and silver spring. Install the upper encoder on the left-rear wheel of the machine.

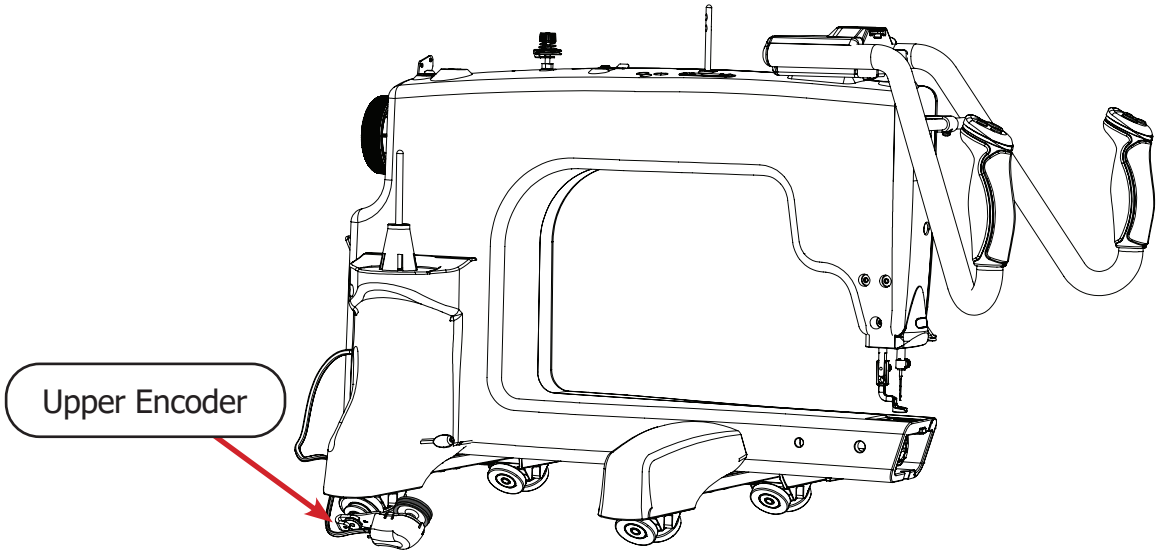

1. Loosen the **lock collar screw** (shown in blue) on the upper encoder with the 2.5 mm Allen wrench until the **lock collar** turns freely. **Note:** Depending on the encoder model, this step may require the 2.0 mm Allen wrench.

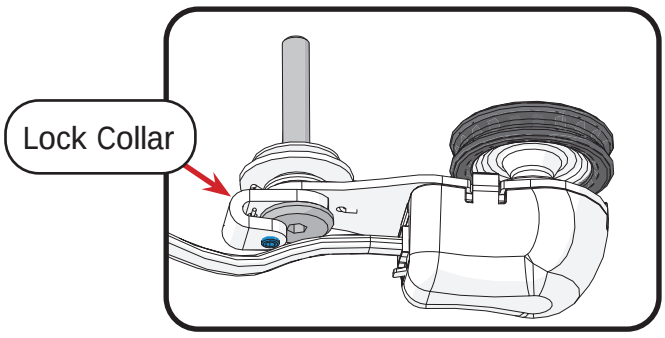

2. Use the 4 mm Allen wrench to remove the **outer left-rear wheel** (shown in blue) from the quilting machine. The screw will not be needed and can be stored with the machine packaging.

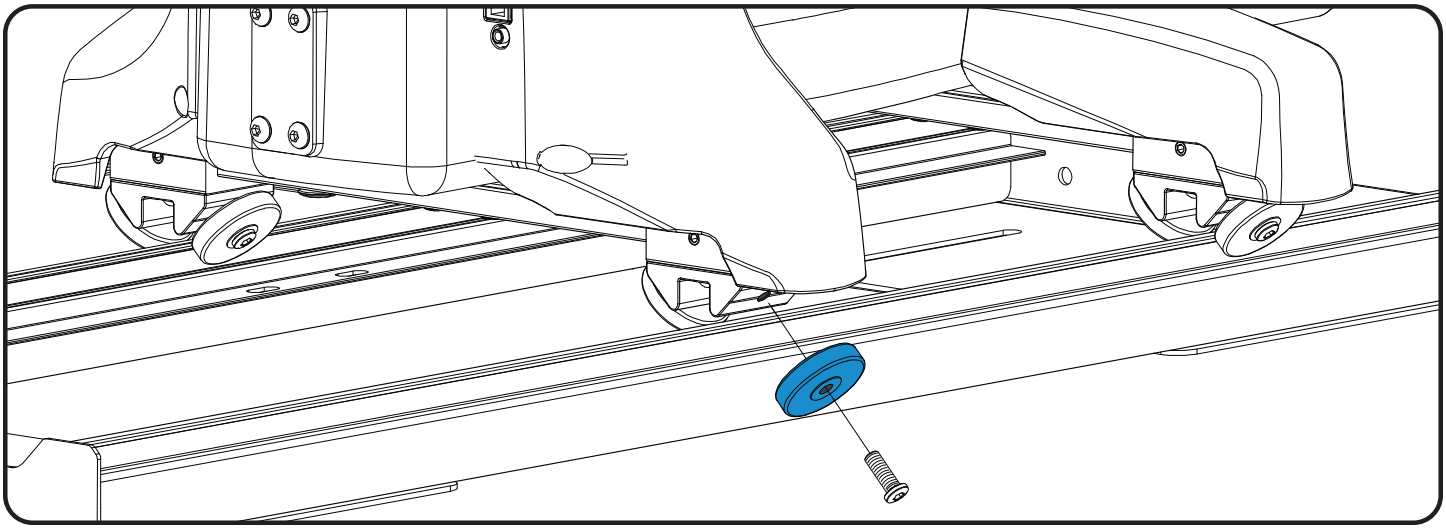

3. Slide the flat side of the wheel onto the **encoder screw** (shown in gray).

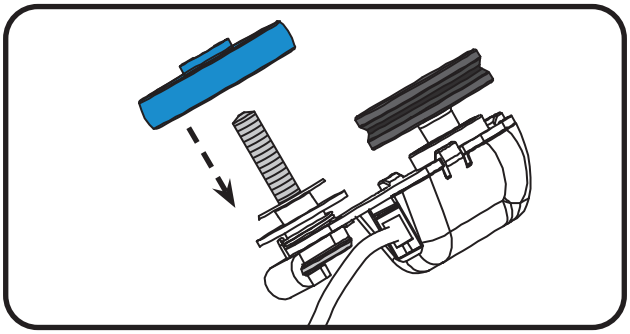

4. Insert the encoder screw into the **wheel hole** on the machine. The encoder **O-ring** should be between the rear wheel and the front of the machine.

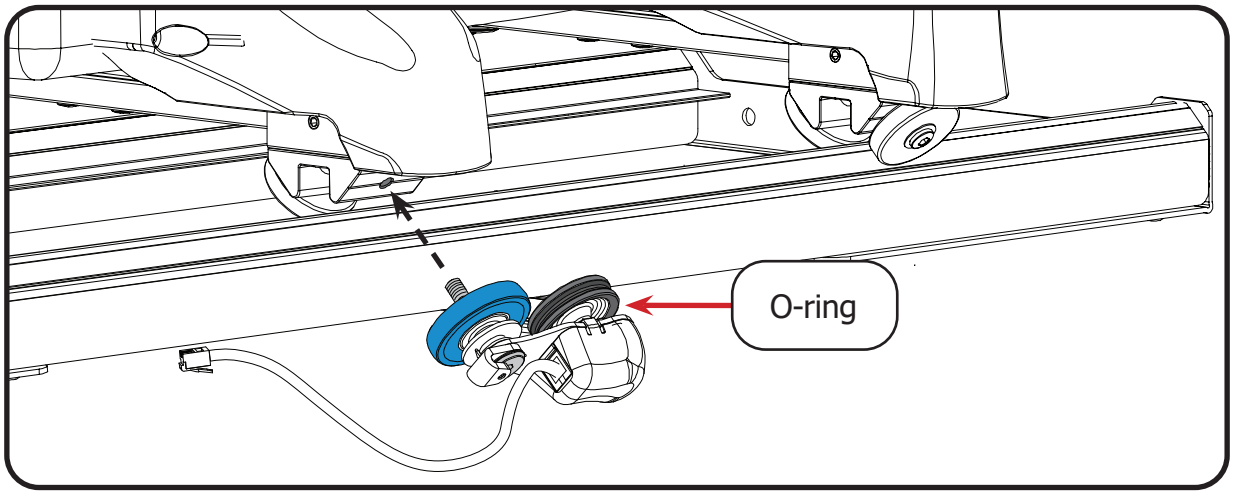

5. Tighten the encoder screw with the 4 mm Allen wrench.

6. Twist the **encoder lock collar** (shown in blue) to point up and tighten the **lock collar set screw** with the 2.5 mm Allen wrench. **Note:** Your machine model may require the 2.0 Allen wrench for this step.

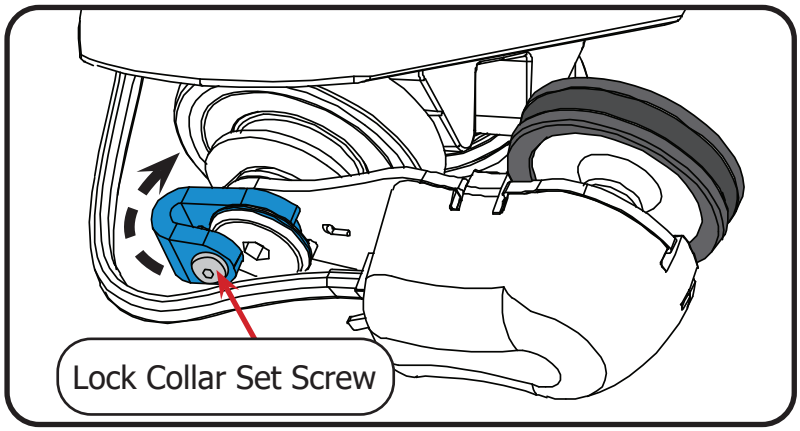

Note: The O-ring rides the track and rotates when the machine is moved up and down the rail.

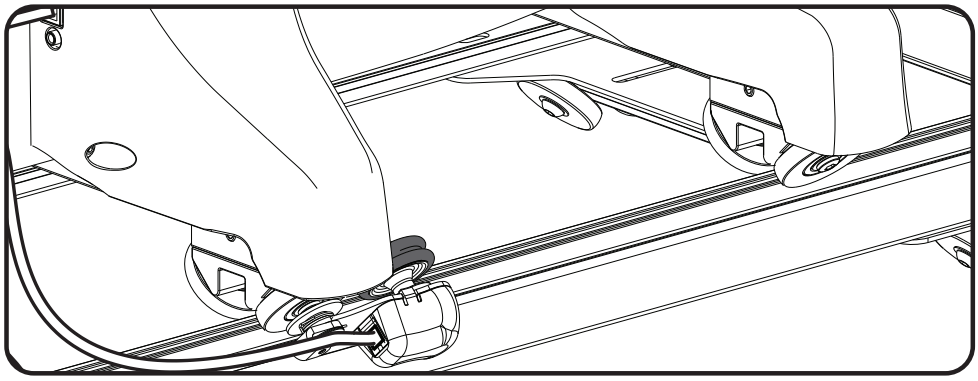

7. Plug the encoder cable into one of the **encoder ports** on the back of the machine.

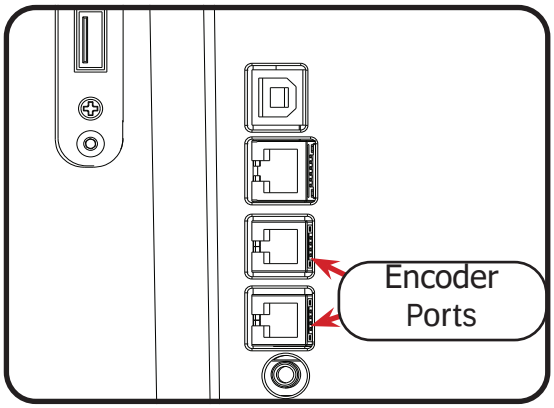

Assembling the Lower Encoder

Parts & Tools Needed:

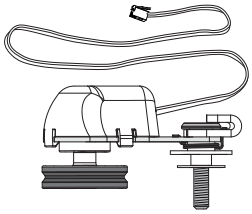

Lower Encoder
(black spring)

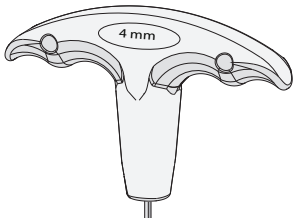

4 mm T-handle Allen Wrench

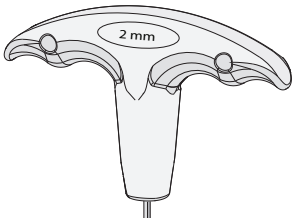

2 mm T-handle Allen Wrench

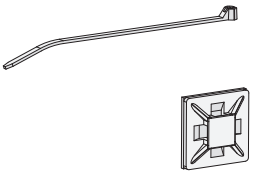

Zip Tie (2)
Zip Tie Mount (2)

Instructions

The **lower encoder** has the long cable and black spring. It must be installed on the rear-facing, left-rear wheel of the **bottom carriage**.

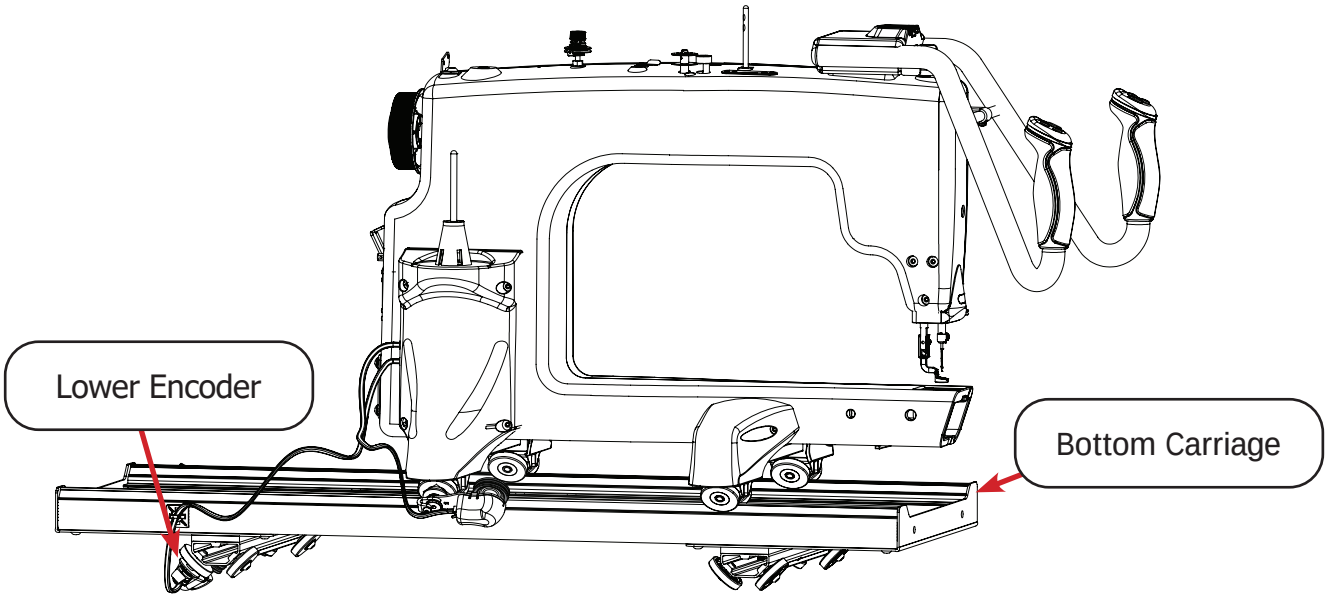

Note: Some bottom carriage styles only have one wheel in each corner of the bottom carriage instead of two. If this is the case, the lower encoder will be installed on the left-rear wheel of the bottom carriage.

1. Loosen the **lock collar screw** (shown in blue) on the lower encoder with the 2.5 mm Allen wrench until the **lock collar** turns freely. **Note:** Depending on the encoder model, this step may require the 2.0 mm Allen wrench.

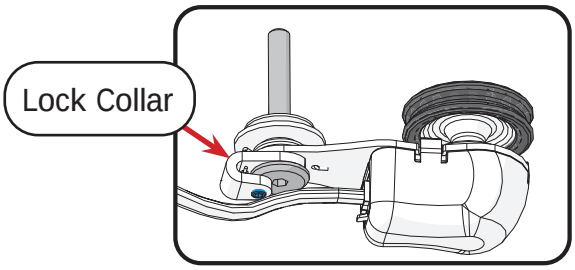

2. Using the 4 mm Allen wrench, loosen the **wheel screw** to remove the **rear-facing left-rear wheel** (shown in blue) from the bottom carriage. **Note:** Some bottom carriage styles have only one wheel at each corner. In that case, remove the left-rear **wheel** and **spacer**.

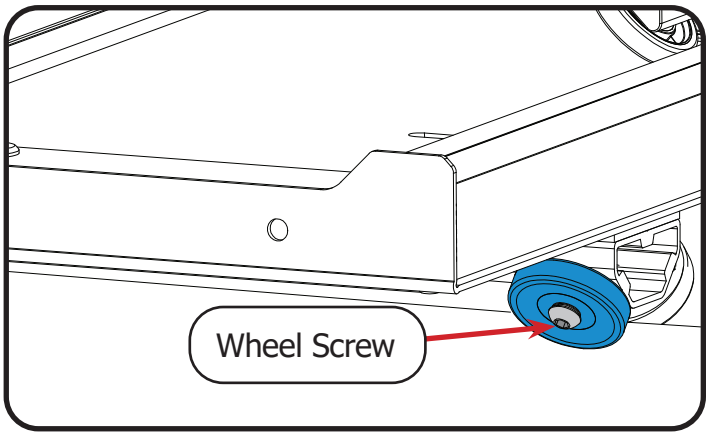

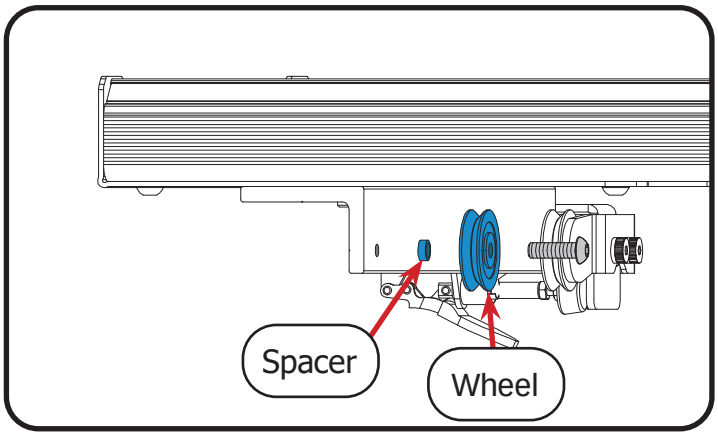

3. Slide the wheel onto the **encoder screw** (shown in gray) so that the flat side of the wheel hub faces the encoder. **Note:** some bottom carriage styles do not have wheel hubs. Instead, place the **spacer** onto the encoder screw after the wheel.

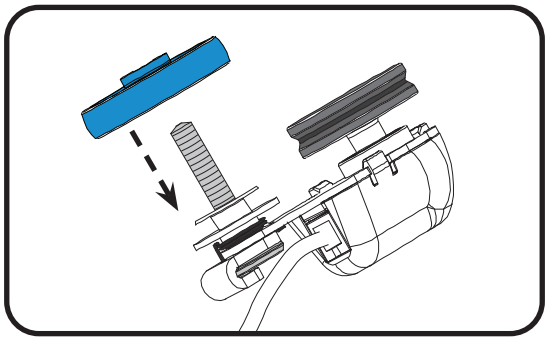

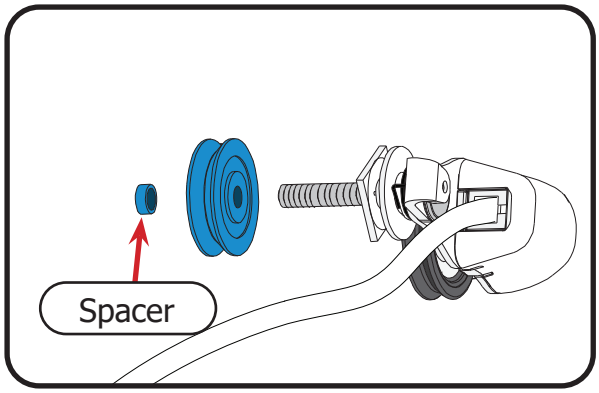

4. Place the encoder screw into the left-rear position of the bottom carriage. The encoder **O-ring** should sit between the **rear-facing wheels** (shown in blue).

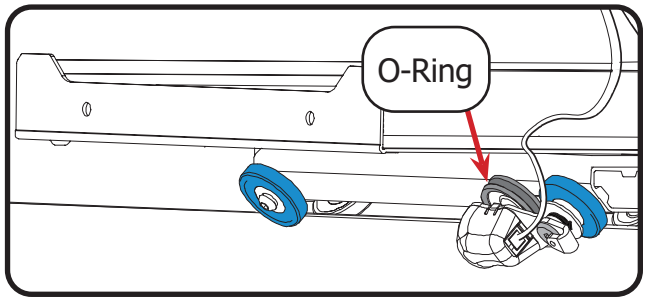

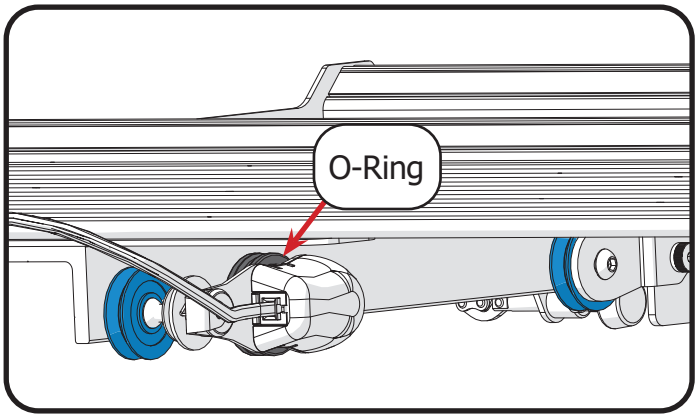

Note: If your bottom carriage is a style with only one wheel at each corner, install the lower encoder so it is between the two rear wheels.

5. Turn the encoder **lock collar** (shown in blue) to point up. Then use the 2 mm Allen wrench to tighten the **lock collar set screw**. **Note:** Your machine model may require the 2.5 Allen wrench for this step.

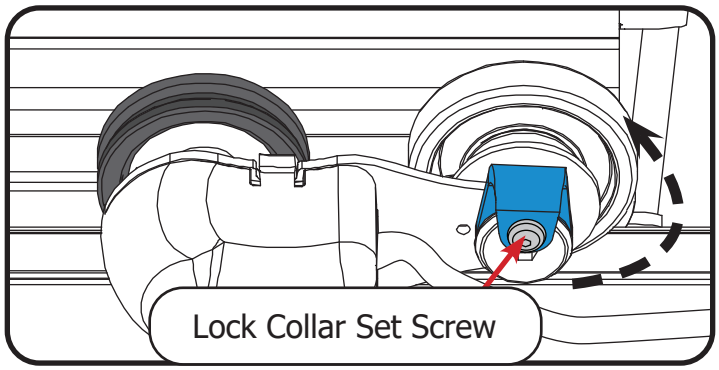

6. Plug the encoder cable into one of the **encoder ports** on the back of the machine.

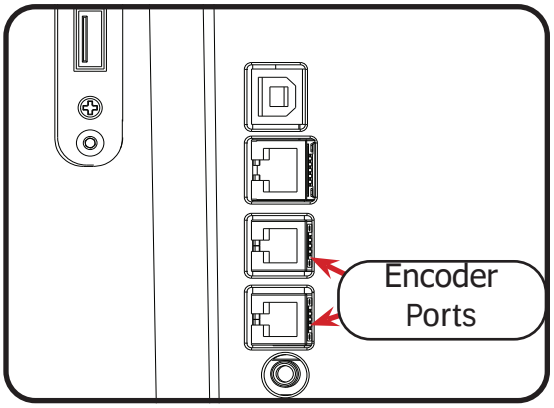

7. To prevent the long encoder cable from catching on the rear corner of the bottom carriage, use the adhesive **zip tie mount** and zip tie to fasten the long encoder cable to the side of the **bottom carriage** (shown in gray).
   - For best results, place the zip tie mount above the rear wheel. Fasten the encoder cable so that all the slack in the cord is between the mount and the machine (not the mount and the wheel).

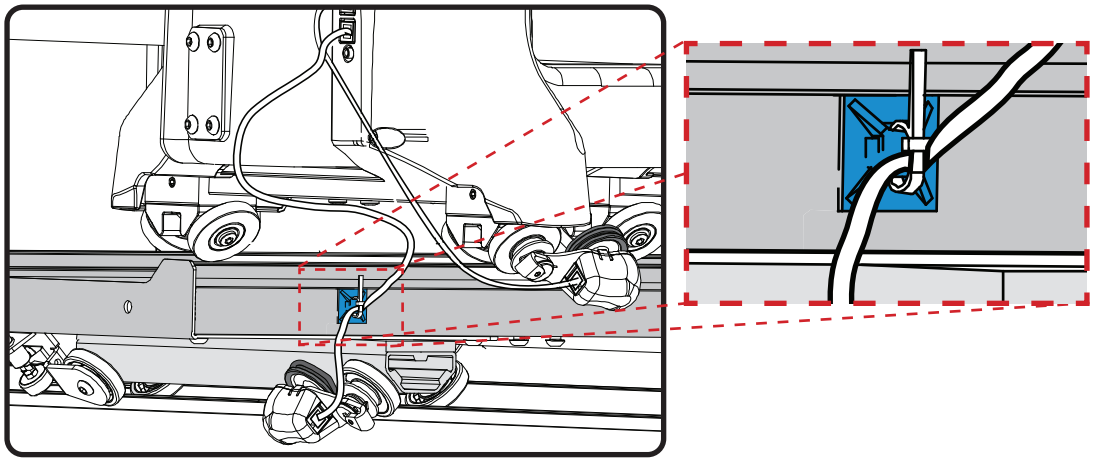

Attaching the Thread Mast

Parts & Tools Needed:

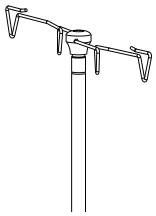

Thread Mast

Instructions

The thread mast guides the thread to prevent snagging or tangling. Only two of the four guide loops are used when winding the bobbin or when threading the machine, so the machine can sew and wind a bobbin at the same time.

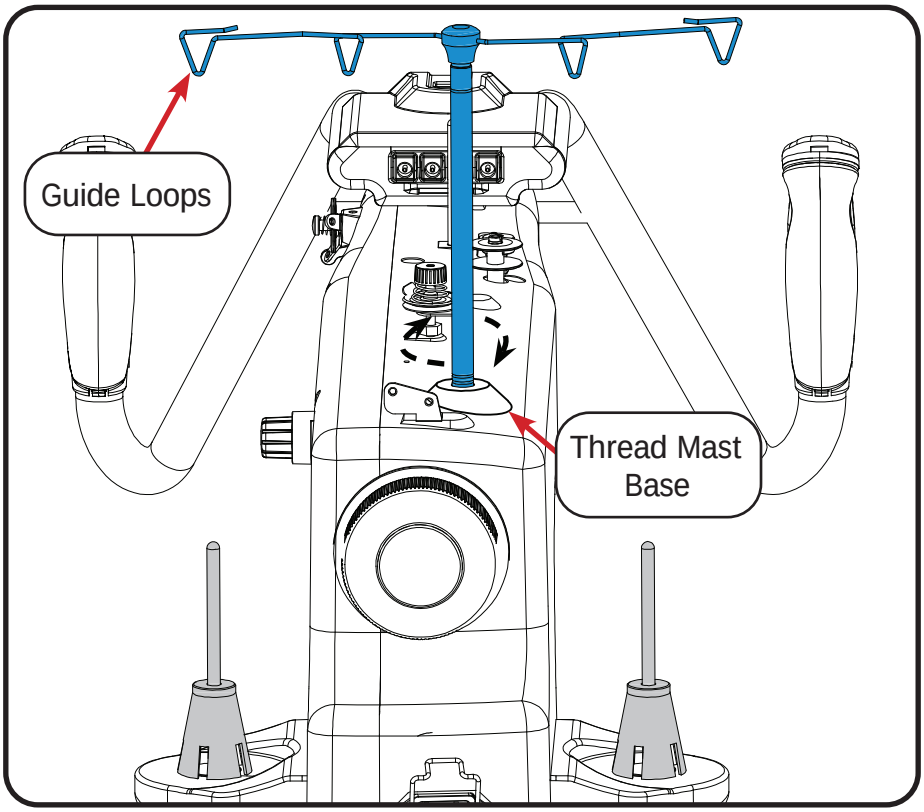

1. Place the **thread mast** (shown in blue) into the **thread mast base**.
2. Twist the thread mast to screw it in place.

Note: The **guide loops** on the thread mast should be positioned so that they are directly above the **thread stands** (shown in gray).

Connecting the Front Display

Parts & Tools Needed:

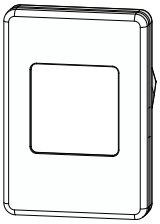

OLED Screen with Cable

Instructions

The OLED front display provides access to the Main Menu and the different quilting modes on the machine. To connect the front display to the machine, please take the following steps:

1. Connect the **display ribbon cable** (shown in blue) to the **display cable port**. You may need to thread the cable out from underneath the **display clip** before it will connect to the port.

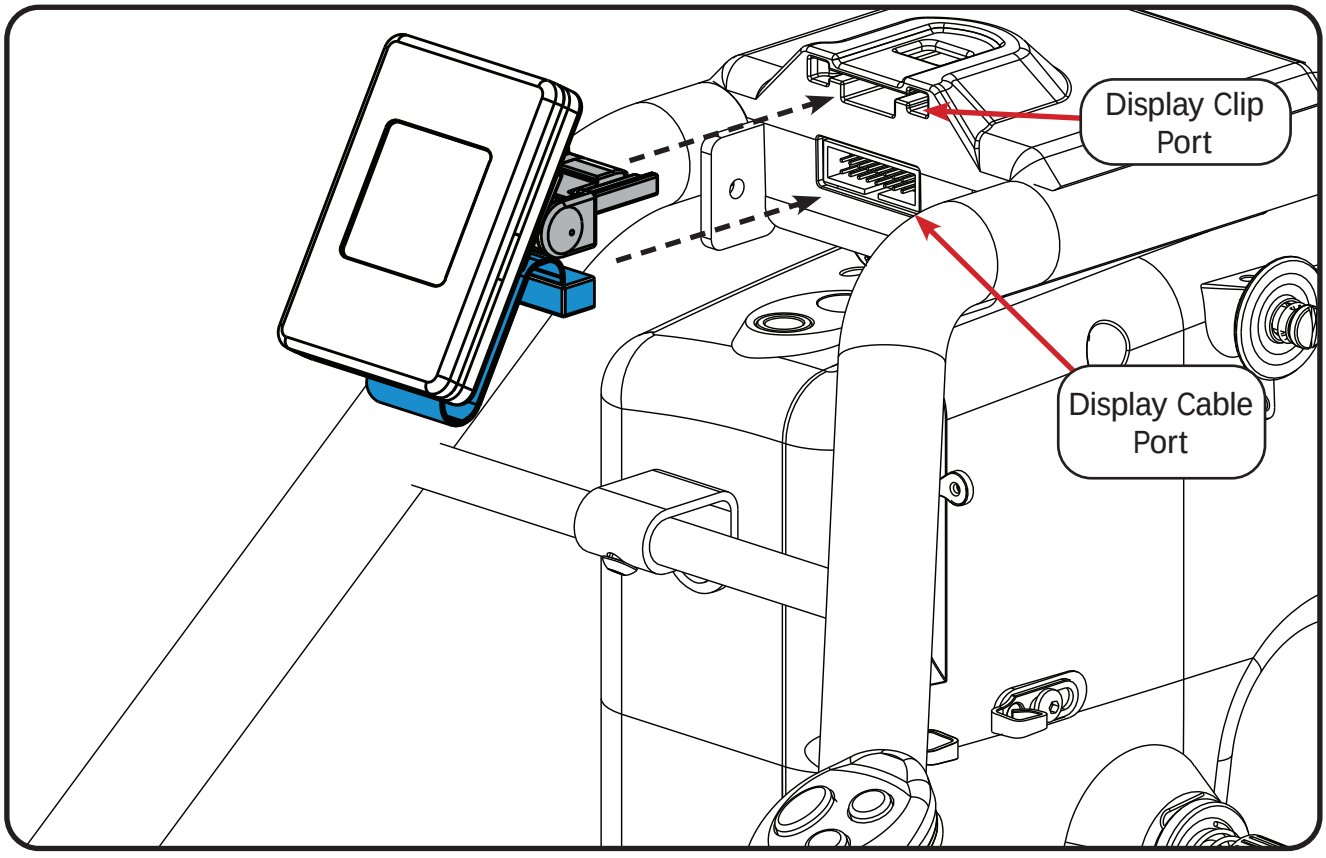

2. Snap the **display clip** (shown in gray) into the **display clip port**.

Turning the Machine On/Off

The **power cable port** and **power switch** are located on the back of the machine.

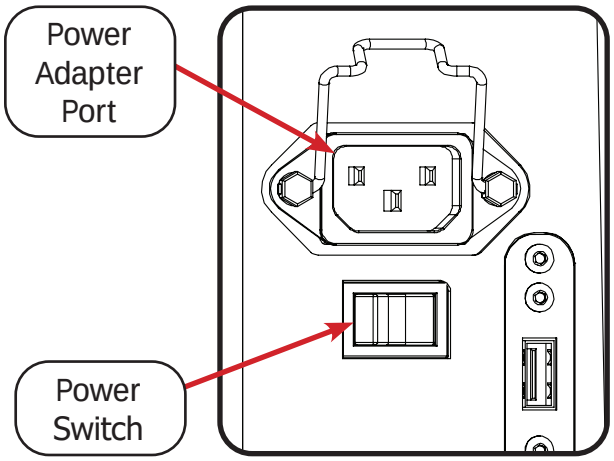

1. Lift up the **power cable retainer** (shown in blue) and plug the **power cable** into the machine.

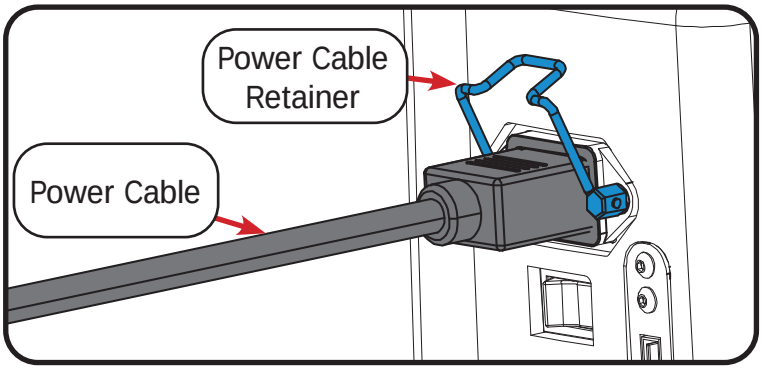

2. Press the power cable retainer down firmly until it grasps the power cable.

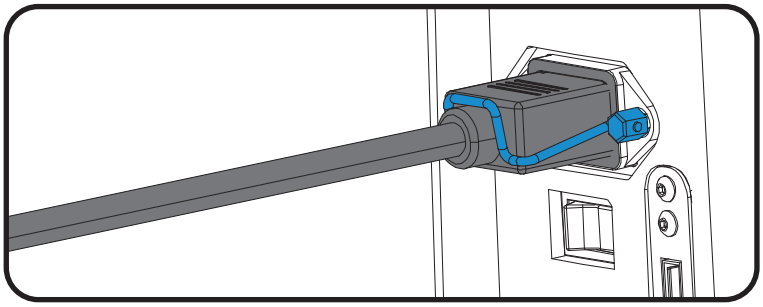

3. Press the right side of the power switch to turn the machine on.

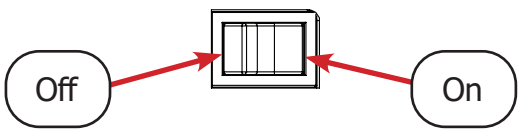

Preparing to Quilt

This section of the manual covers winding the bobbin, loading the bobbin case, and threading the machine.

Winding the Bobbin ..... **page 26**

Loading the Bobbin Case ..... **page 29**

Threading the Machine ..... **page 32**

Final Checklist ..... **page 40**

Winding the Bobbin

Parts & Tools Needed:

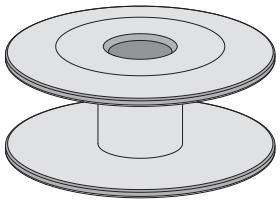

Bobbin (Class M Large)

Instructions

Your machine comes with two bobbins wound with 50 weight cotton thread. Please note that using bobbin thread that does not match the top thread can cause machine malfunctions. An empty M-class bobbin has been provided.

Note: This machine uses cone-style thread. Unless you have the spool accessory, please use only thread cones for this machine. For more information on choosing quality thread, see "Threading the Machine" on page 32.

The following diagram outlines the path the thread (shown in blue) must take to wind the bobbin.

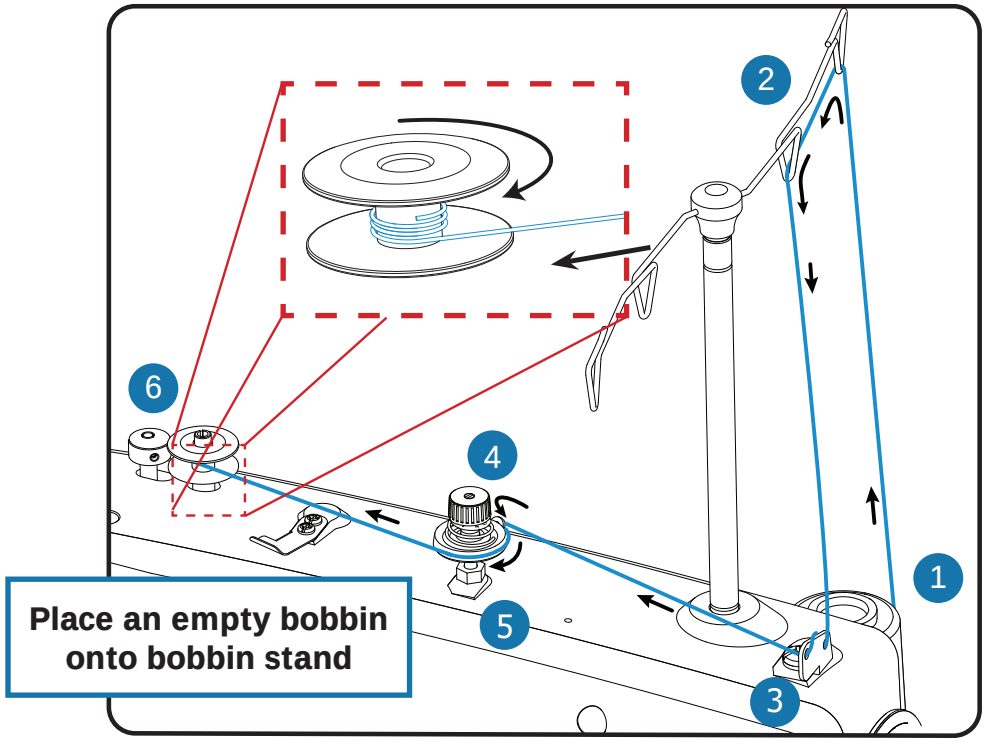

1. Thread Stand
2. Guide Loops
3. Bobbin Thread Guide
4. Spring Hook
5. Bobbin Thread Tensioner
6. Bobbin Stand with Bobbin

1. Run the thread through two of the **guide loops** on the **thread mast**. Leave the other two loops available for threading the machine. **Note:** Avoid wrapping the thread around the mast by threading the first guide loop from back-to-front, and the second guide loop from front-to-back.

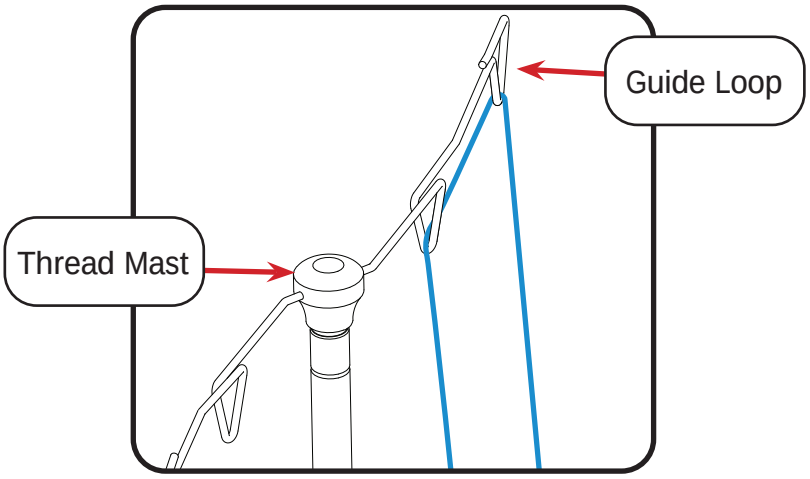

2. Feed the thread through the back of the first hole (closest to the thread cone) on the **bobbin thread guide**. Then wrap it back over and pass through the back of the second hole.

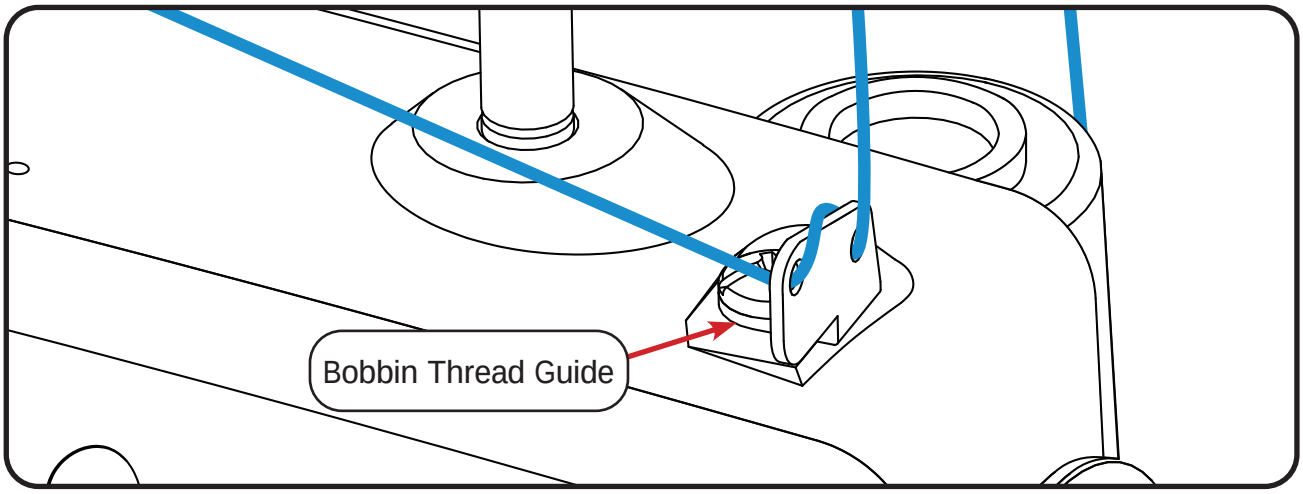

3. Pull the thread through the hole in the **tensioner thread guide**, and then around the back of the **bobbin thread tensioner**, between the two discs.

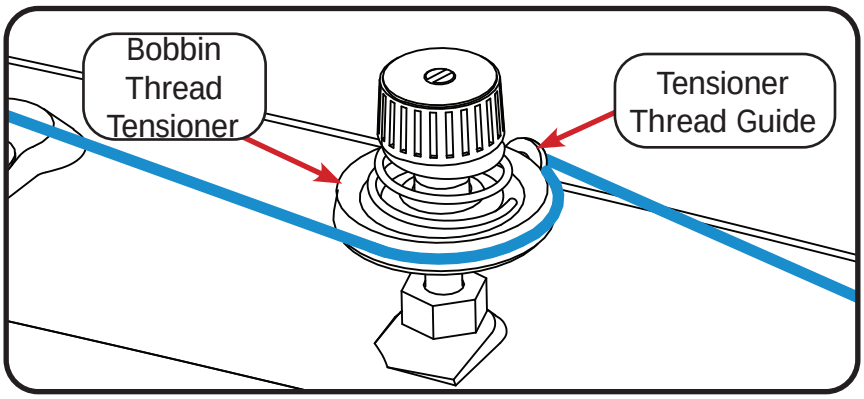

4. Wrap the thread clockwise around the **bobbin** a few times to hold the thread in place. The thread should be taut. Then push the **bobbin cam** toward the bobbin to start winding.

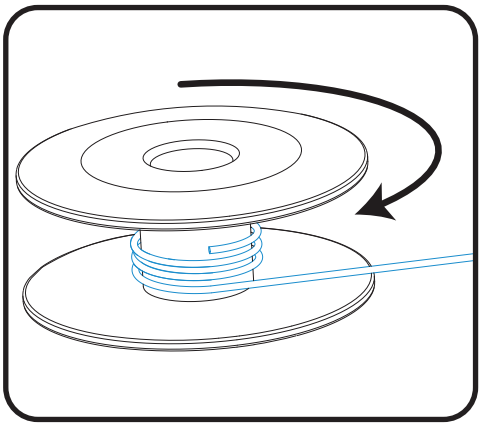

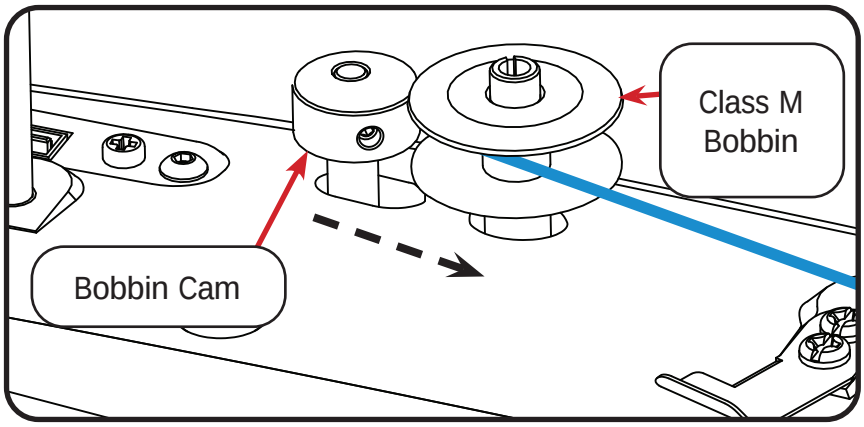

Tip: Check your bobbin to see how it is winding. Thread should distribute evenly along the bobbin and appear neat and smooth.

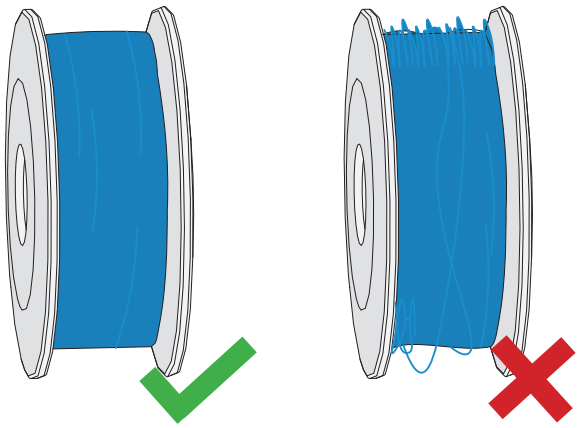

5. When the bobbin is full, the winding will automatically stop (to adjust bobbin fill levels, see "Adjusting the Bobbin Cam" on page 62). Cut the excess thread using the built-in **thread cutter** next to the bobbin stand.

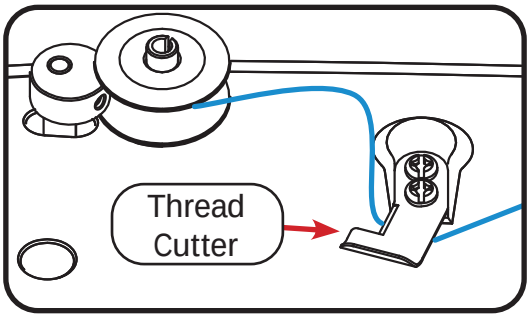

Loading the Bobbin Case

After filling the bobbin, it is time to insert it into the bobbin case and place it in the machine.

1. Check that the needle is in the "Up" position. The bobbin case will not release from the machine if the needle is down.

2. Press Main Menu (top left) button on the handlebar controls to go to the Main Menu on the display. This will prevent any accidental stitching or needle movement.

3. Pull the **release lever** on the bobbin case to remove the bobbin case from the machine.

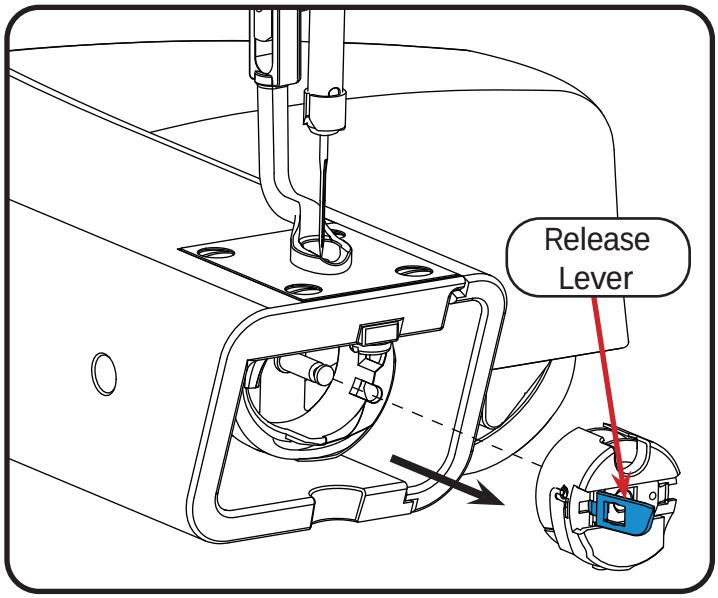

4. Place the wound bobbin into the **bobbin case**. Please note the direction that the thread is coming off the bobbin in relation to the case.

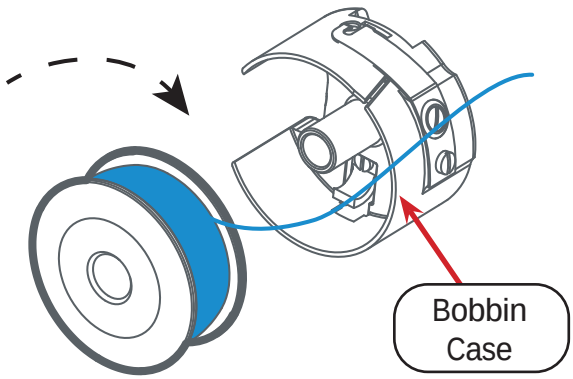

5. Slip a few inches of thread through the **slot** and out of the **hole**.

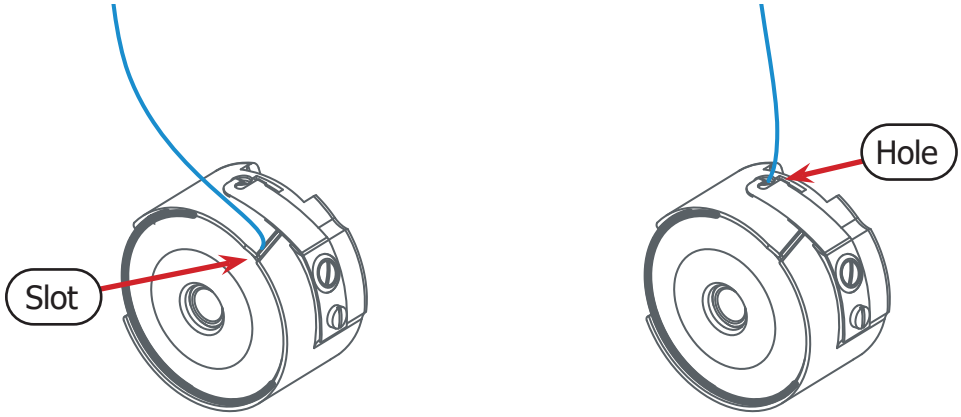

Note: If the bobbin is wound correctly it will turn clockwise when the thread is pulled.

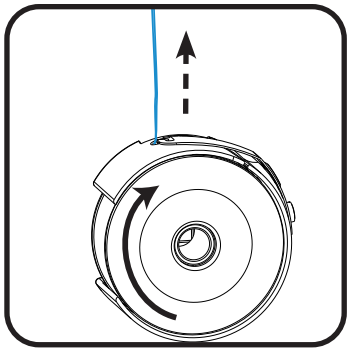

6. Test the tension of the bobbin case. Bobbin tension is the foundation for correct thread tension, so test the tension each time the bobbin thread is changed.

    a. Place the bobbin case on its side on your palm.

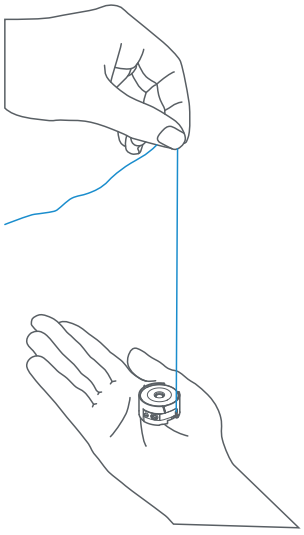

b. Pull up on the thread. The thread should run freely. If the tension is correct, the bobbin will rise into a vertical position without lifting off the surface.

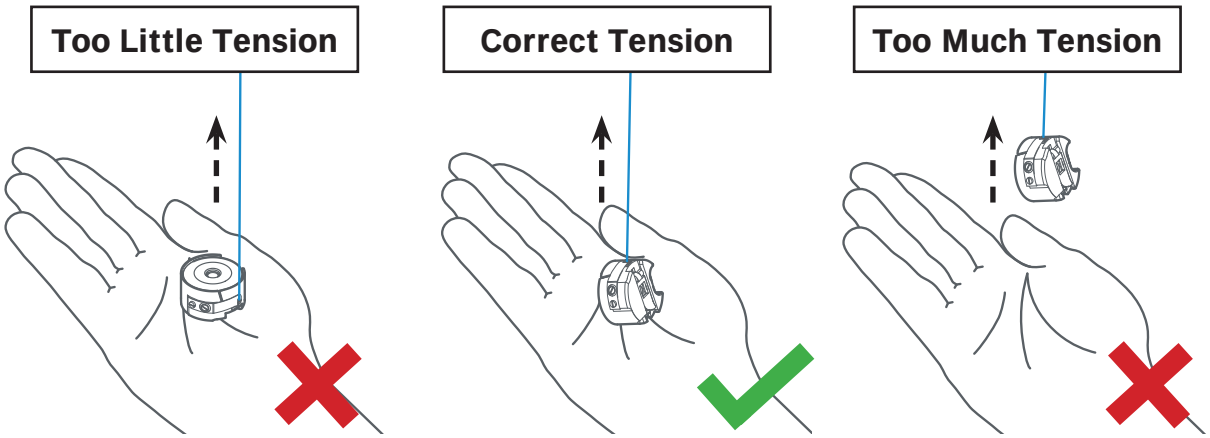

- If the bobbin case remains on its side, there is too little tension. Turn the **large screw** (shown in gray) clockwise.
- If the case lifts into the air, there is too much tension. Turn the **large screw** (shown in gray) counter-clockwise.

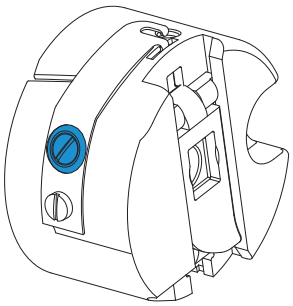

7. Once the thread tension in the bobbin case is correct, place the bobbin case inside the quilting machine with the **lever** (shown in blue) at the 3 o'clock position. It should click into place. Do not pull on the lever while inserting the bobbin case.

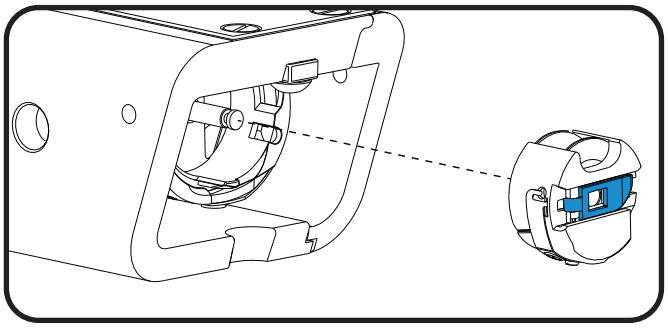

Threading the Machine

Before threading the machine, make sure you've selected quality thread for your project. Choosing the right thread for the machine can prevent the thread from breaking or tangling up under the needle plate. Note the following:

- This machine uses cone-style thread, not thread from a spool. Do not use spool thread unless the spool accessory has been installed.
- Choose thread that is strong enough to pass the yank test, and re-test thread as it ages. Thread strength can diminish over time.

  a. Hold the cone in one hand and the end of thread in the other.

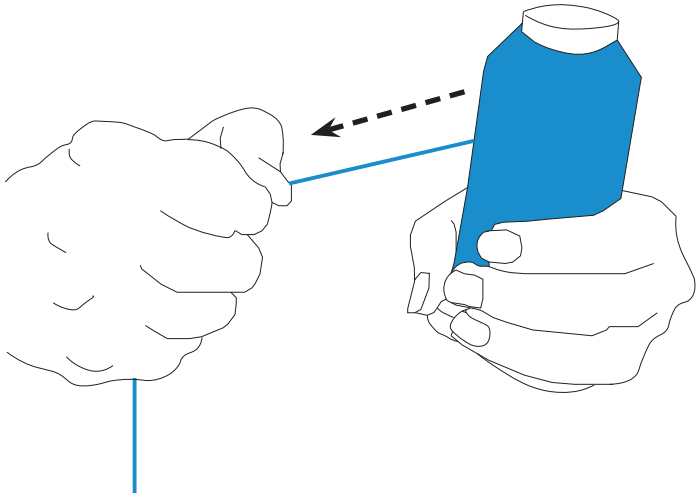

  b. Give the thread a pull. If the thread snaps easily, it may be too brittle to use in the quilting machine.

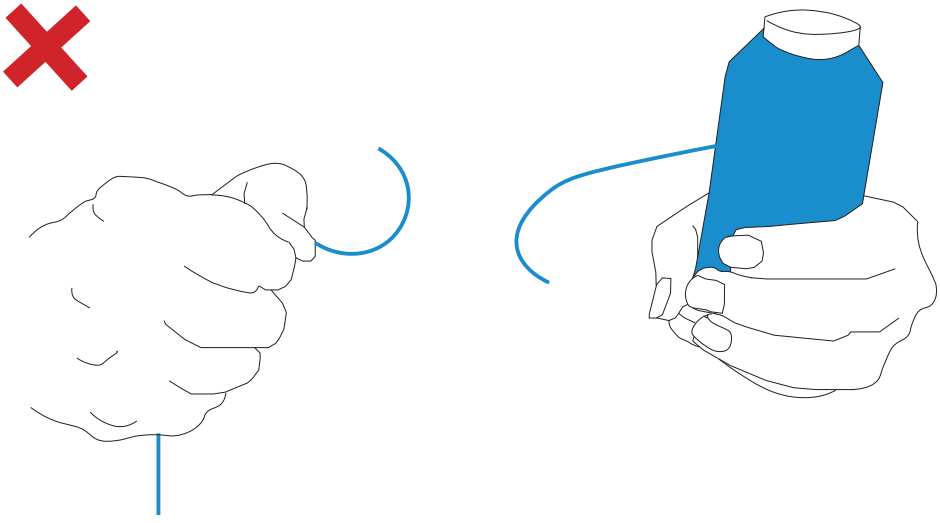

The following diagram outlines the path the thread (shown in blue) must take through the machine.

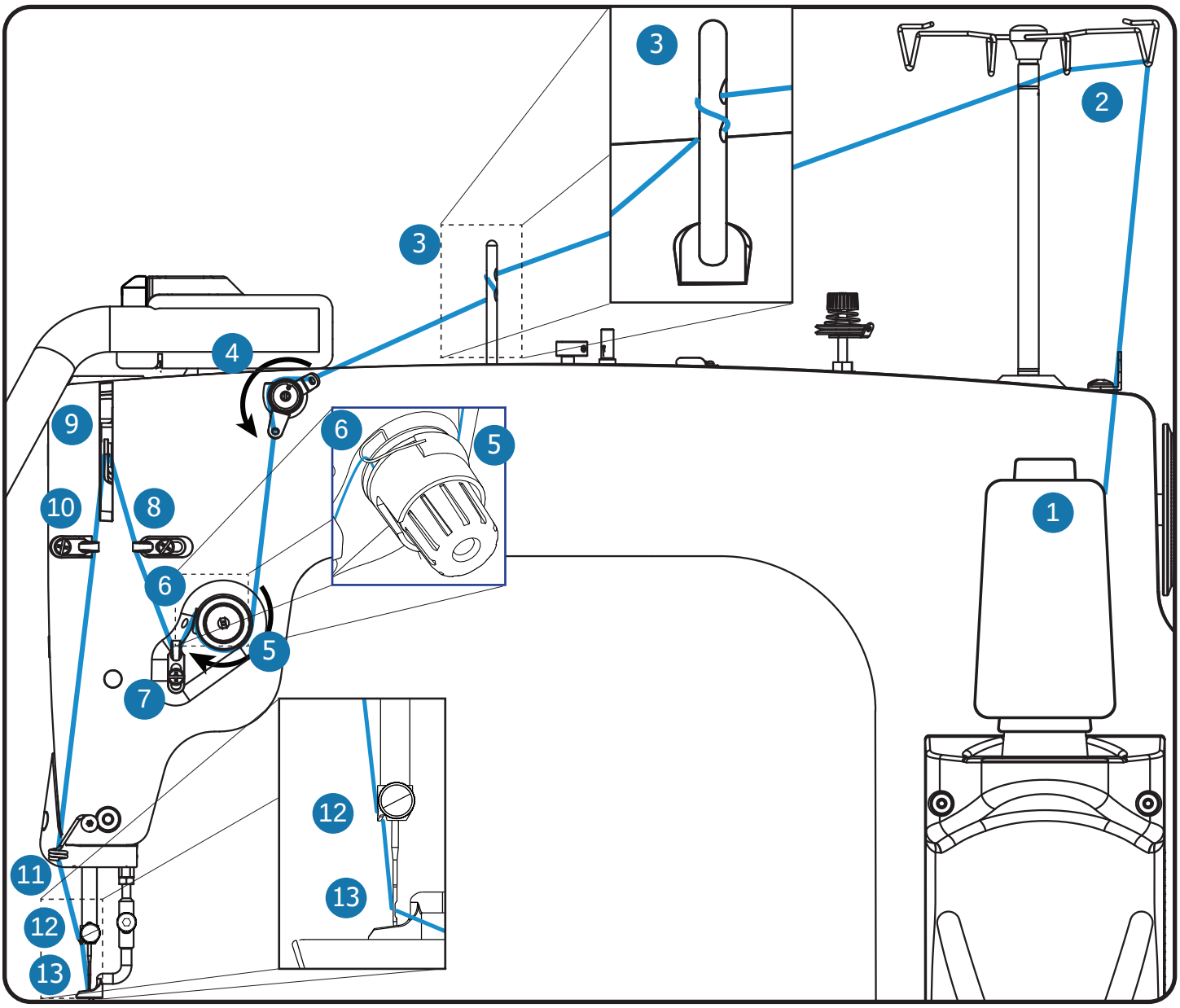

1 Thread Cone
2 Thread Mast
3 Dual Thread Tensioner
4 Small Thread Tensioner
5 Large Thread Tensioner
6 Check Spring
7 Thread Guide
8 Left Thread Guide
9 Take-up Lever
10 Right Thread Guide
11 Bottom Thread Guide
12 Eyelet of Needle Bar
13 Eye of Needle

1. Check that the needle is up. It cannot be threaded if it is down.
2. To prevent accidental stitching or needle movement, press the Main Menu (top-left) button on the handlebar controls to go to the Main Menu.
3. Place the **thread cone** on one of the cone-style **thread stands**.

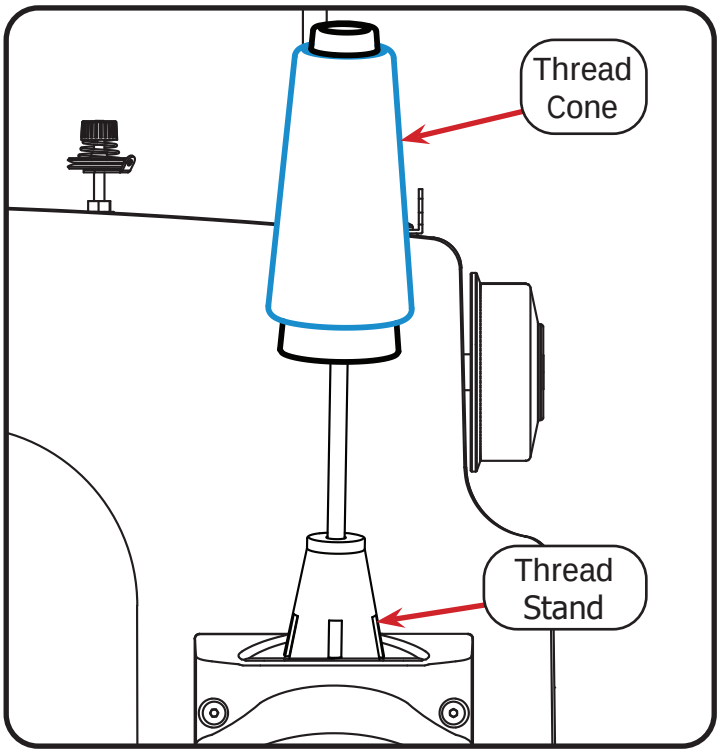

4. Pull the thread straight up and through the two **guide loops** of the **thread mast**. Avoid accidental twisting by threading from front-to-back on the first loop, and then back-to-front on the second loop.

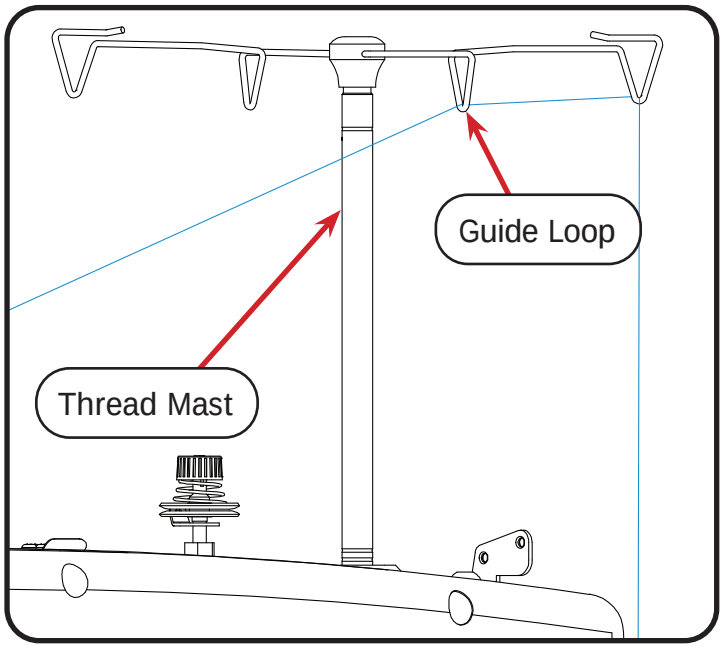

5. Feed the thread through the top hole of the **thread guide rod**. Wrap the thread around to the back of the guide and insert through the bottom hole.

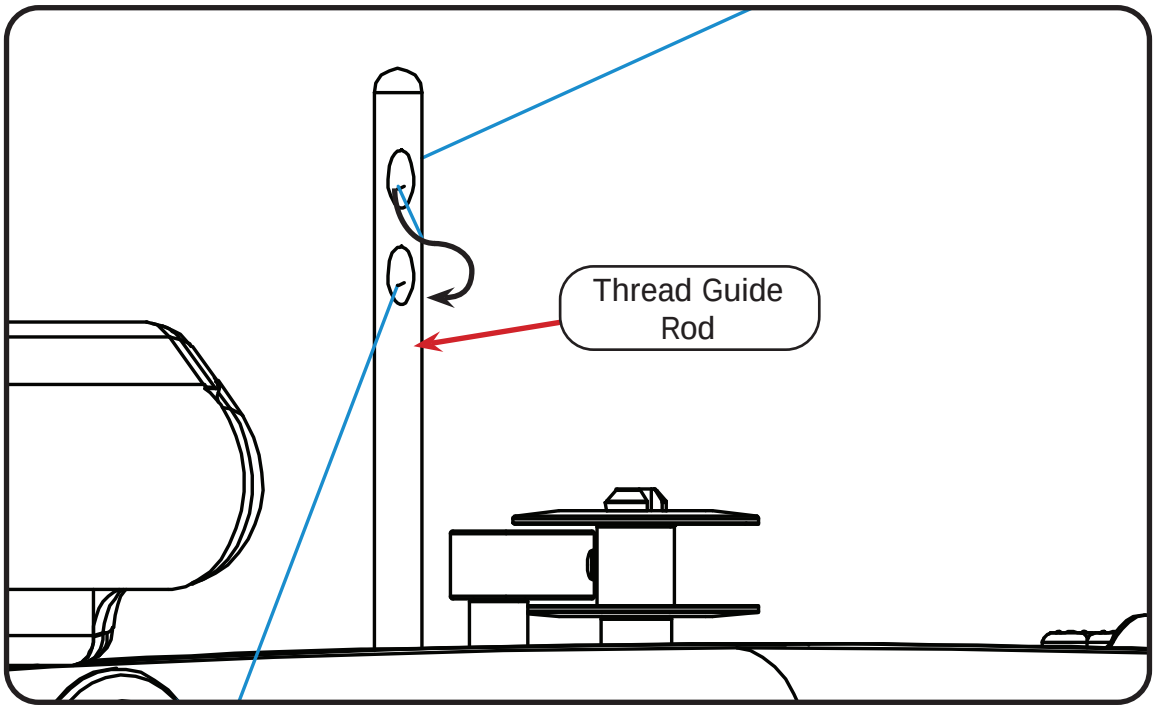

6. Run the thread through the top hole on the **small thread tensioner**. Then slip the thread between the two discs, and through the bottom hole of the **small thread tensioner**.

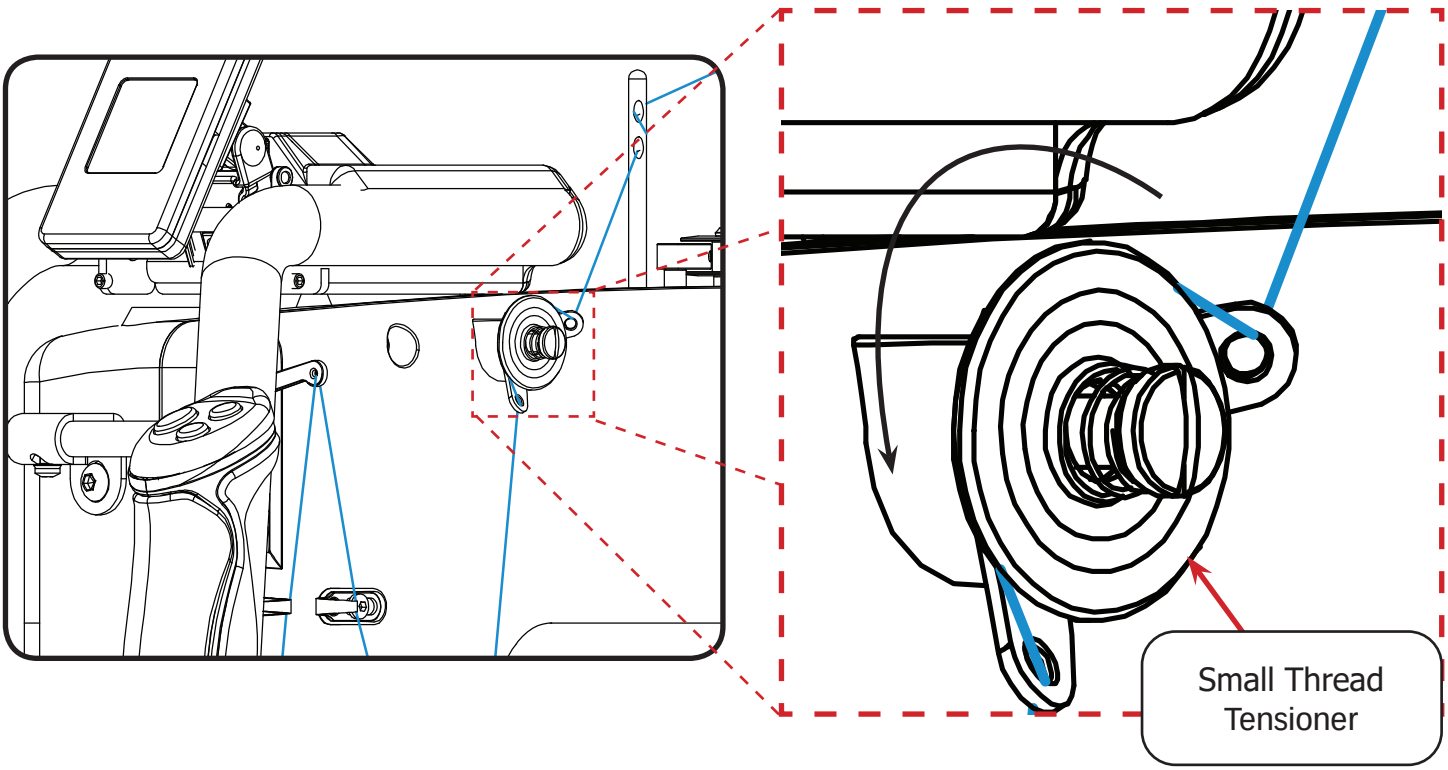

7. Loop the thread down around the **large thread tensioner** between the tensioner discs. Catch the thread on the **check spring**.

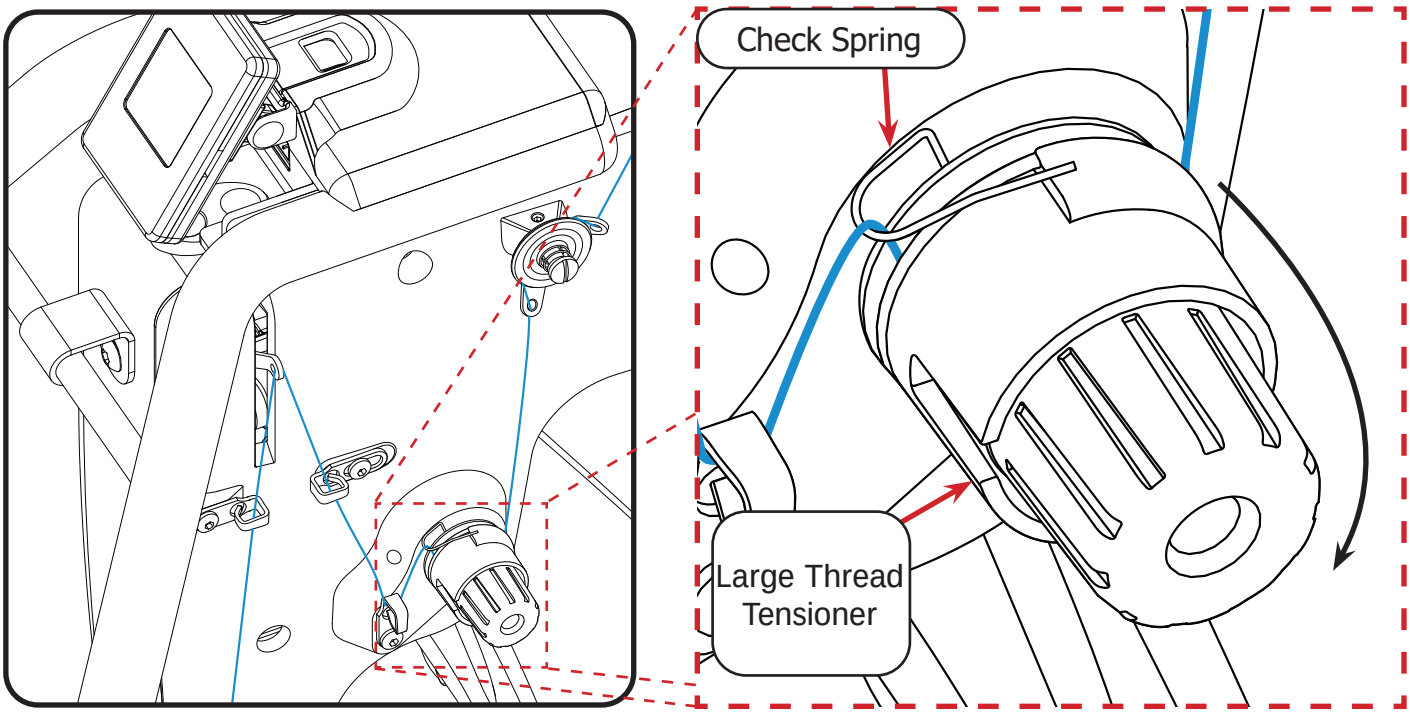

8. Next, run the thread through the **thread guide** next to the large thread tensioner.

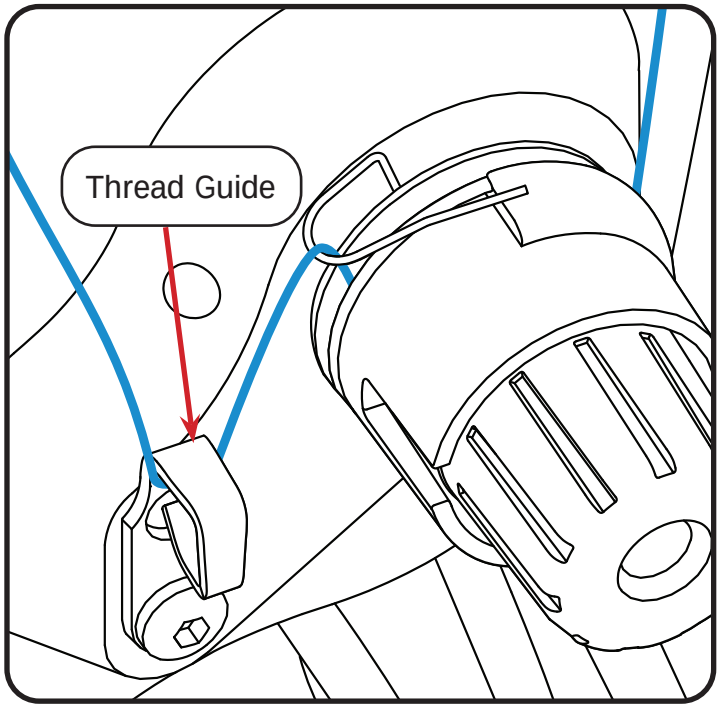

9. Pass the thread up through the **right thread guide** on the way to the take-up lever.

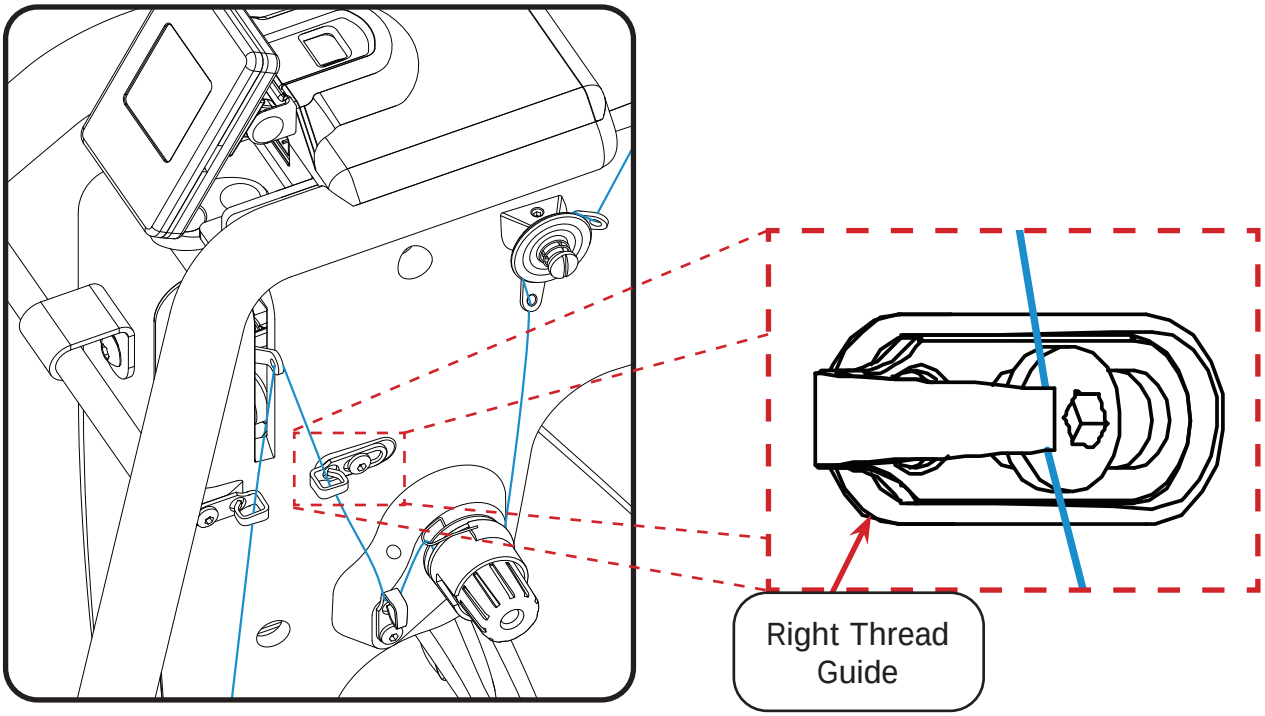

10. Pull the thread through the hole in the **take-up lever**.

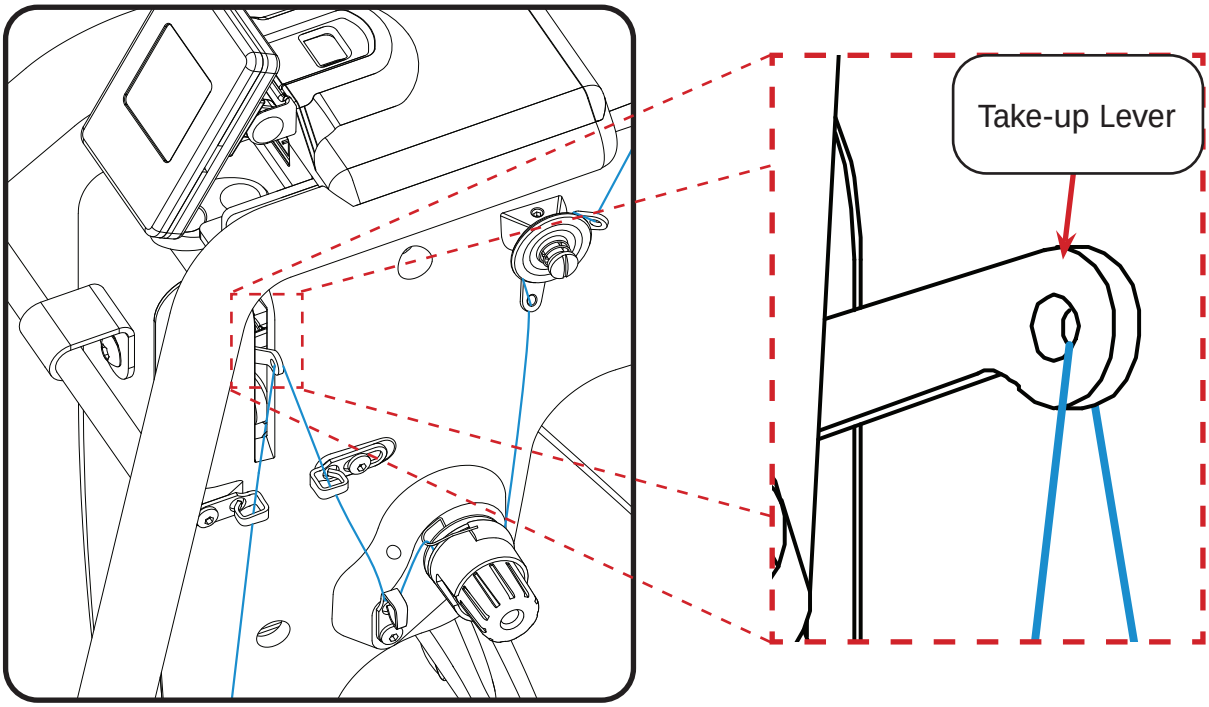

11. Feed the thread into the **left thread guide**, below the take-up lever.

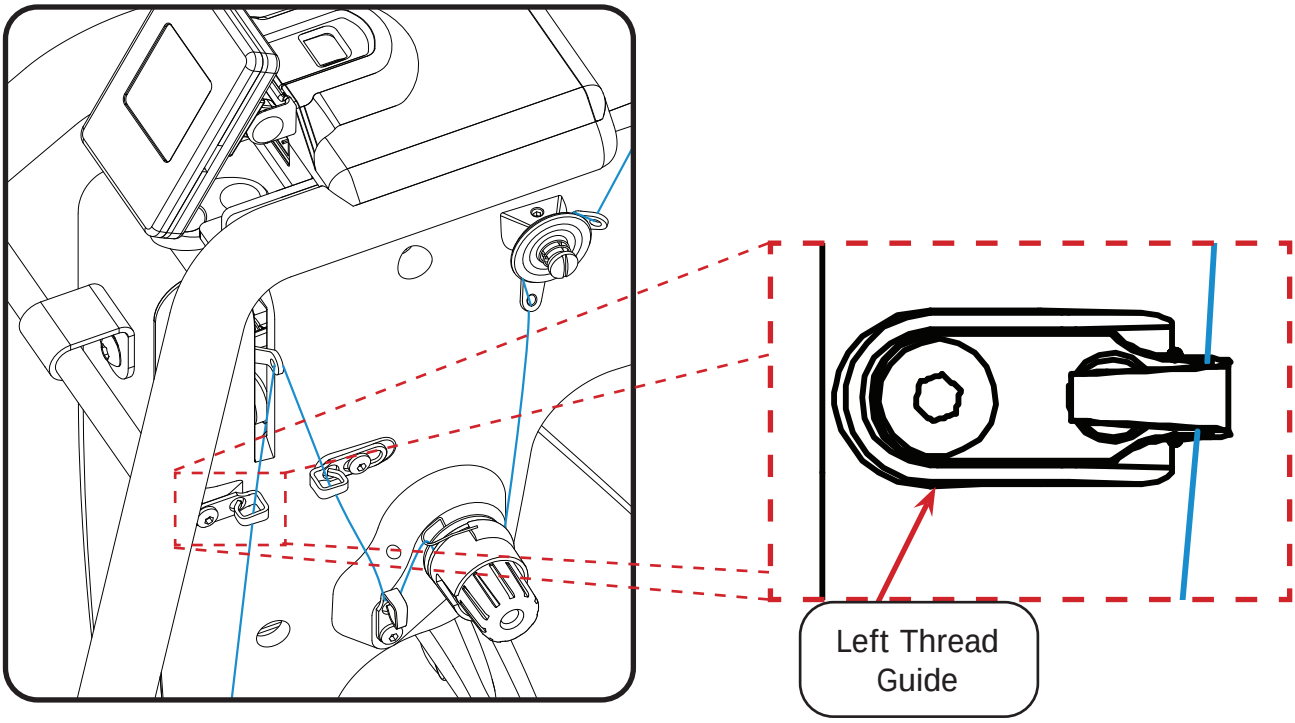

12. Then pass the thread down through the **bottom thread guide** on the way to the needle.

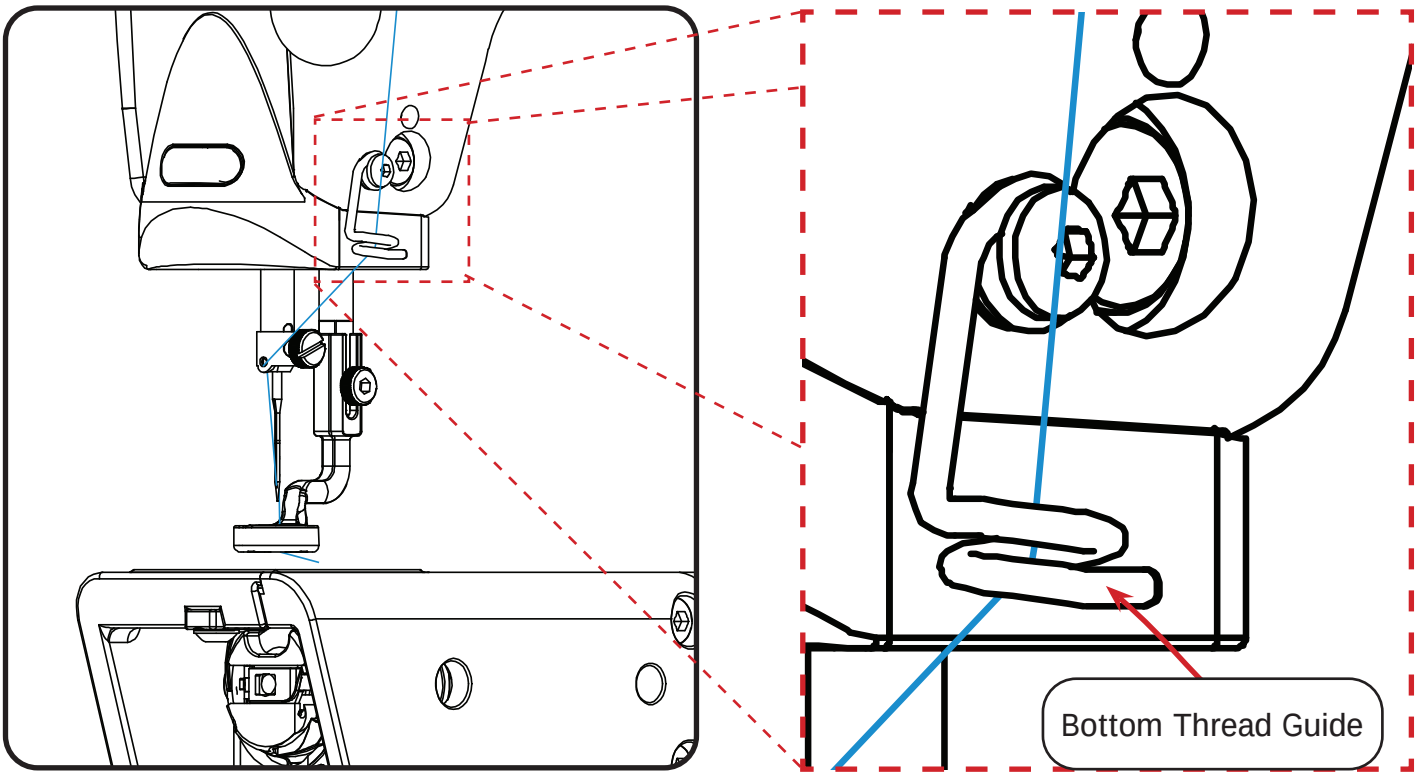

13. Now pass the thread through the front of the **needle bar eyelet**, located above the needle.

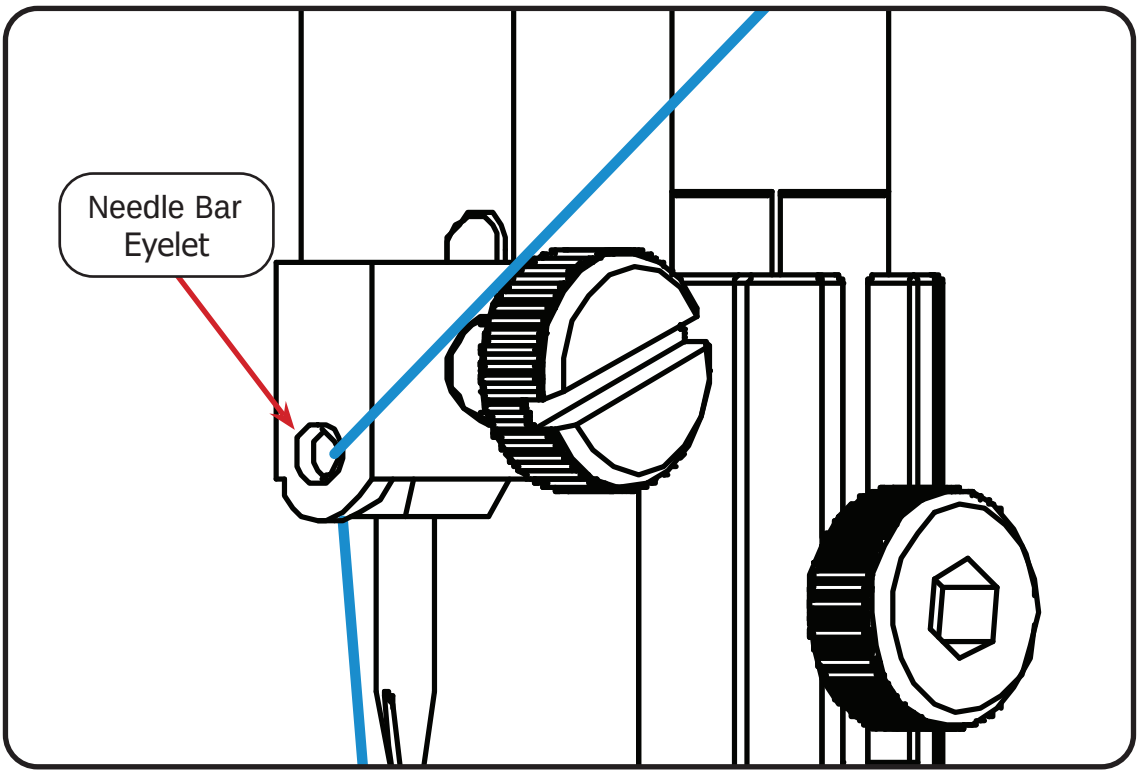

14. Finally, feed the thread through the **eye of the needle**. Leave a few inches of dangling thread.

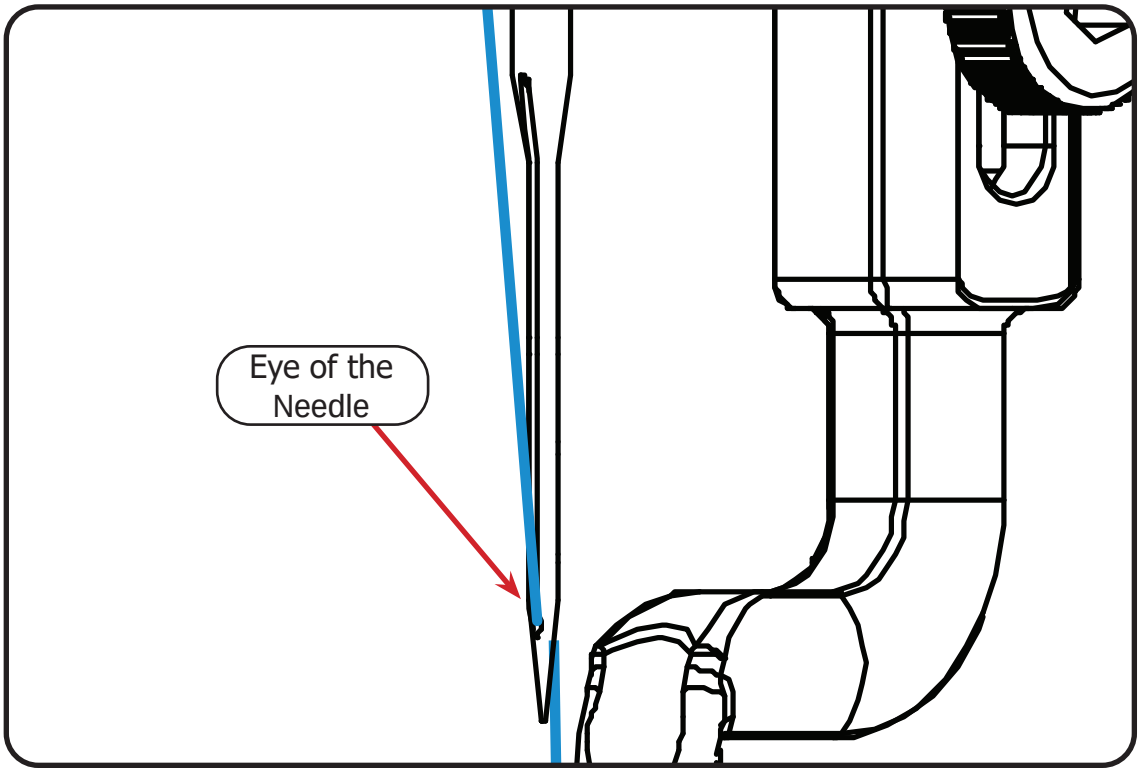

Final Checklist

Before you begin quilting, make sure that:

- The thread mast is tightly attached.
- The bobbin is wound and installed in the machine.
- The display is secured.
- The needle is straight, and held firmly to the needle bar.
- The power cord is connected to the machine and power outlet.
- The quilting area is clear of any materials that are not needed for quilting.

Quilting

Now that the machine is set up, it's time to start quilting! This section of the manual covers using the handlebar controls, the quilting modes, tensioning thread, and using the Tools menu.

Using the Handlebar Controls .....page 42

Choosing a Quilting Mode .....page 43

Quilting in Precise Mode.....page 44

Quilting in Cruise Mode .....page 45

Using the Baste Quilting Mode .....page 46

Quilting in Manual Mode.....page 47

Adjusting Thread Tension.....page 48

Using the Tools Menu .....page 50

Tracking Stitch/Time Count.....page 51

Customizing Machine Setting.....page 52

Tip: As you familiarize yourself with the controls and display of your quilting machine, it's a good time to test out any new quilting materials and try a few practice stitches. Test your thread tension while practicing on the different quilting modes available on the machine.

Using the Handlebar Controls

When first powered up, the machine is in precise regulated quilting mode and can start quilting right away. Please take a moment to review the handlebar controls. These controls are used when quilting, and when navigating the menu on the display.

Note: Left-handed quilters may prefer to reverse these buttons. This can be done in the Preferences menu. See "Customizing Machine Settings" on page 52.

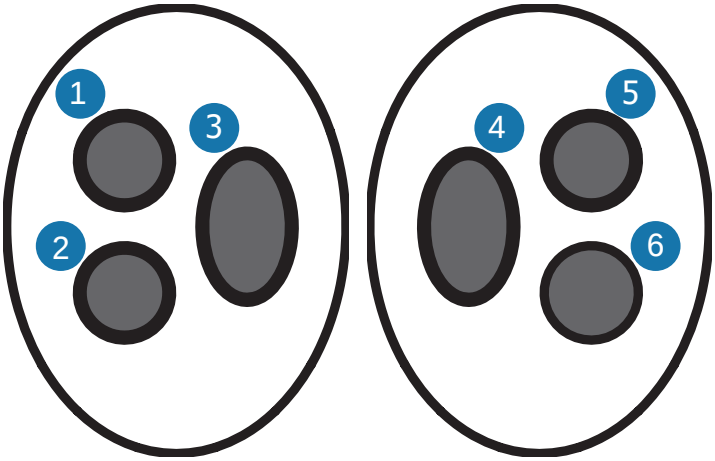

1 **Menu:** Press to go to the Main Menu screen. The Main Menu provides access to the other quilting modes and the Tools menu.

2 **Back:** This button goes back to the previous menu.

3 **Needle Up / Needle Down:**

- Press and release to cycle the needle to the up or the down position.
- Press and hold for three seconds to change the default needle stop position. Powering off the machine will clear the changes made to this setting and the needle will default to the up position once the machine is turned back on.

4 **Start/Stop Quilting** or **Select:** When pressed in regulated quilting mode, baste quilting mode, or manual quilting mode, the machine will begin or stop stitching. While in the Main Menu or the Tools menu, this button selects the highlighted option.

5 **Up:** This button scrolls up in a menu. While quilting, it increases the machine speed or stitch length, depending upon the quilting mode.

6 **Down:** This button scrolls down in a menu. In a quilting mode, it will decrease the machine speed or stitch size.

Choosing a Quilting Mode

When first powered up, the machine starts in precise regulated quilting mode. To switch to a different quilting mode, press the menu button on the handlebar to go to the Main Menu.

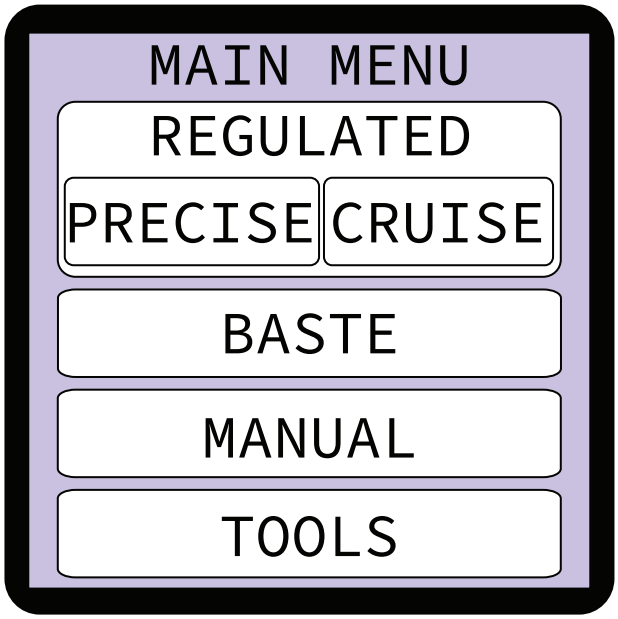

There are four quilting modes available: precise regulated, cruise regulated, baste, and manual. Each option allows for the use of different quilting techniques.

- **Regulated:** Choose the size of the stitching (stitches per inch) and the quilting machine adjusts the speed of stitching to match the quilter's movements. This keeps the stitches consistent with the selected size. There are two types of regulated quilting: precise, and cruise.

  Precise: In this mode, the machine will stop stitching when it is not being moved.

  Cruise: In this mode, the machine will stitch in place when it is not being moved. Stitch speed never drops below 5%.

- **Baste:** Create loose, temporary stitches to hold layers of fabric together.

- **Manual:** This quilting mode is the reverse of regulated. Select a speed for the machine to stitch at, and adjust your movements to create shorter or longer stitches. This mode is useful for small, continuous stippling patterns.

Quilting in Precise Mode

In this mode, the machine adjusts the speed of the stitching to match the quilter's movements. This keeps the stitch sizing consistent with the chosen stitch length (displayed in SPI). If the quilter stops moving, the machine stops stitching. To sew in regulated precise quilting mode, take the following steps:

1. Select Precise from the Main Menu. The Regulated Precise screen displays.

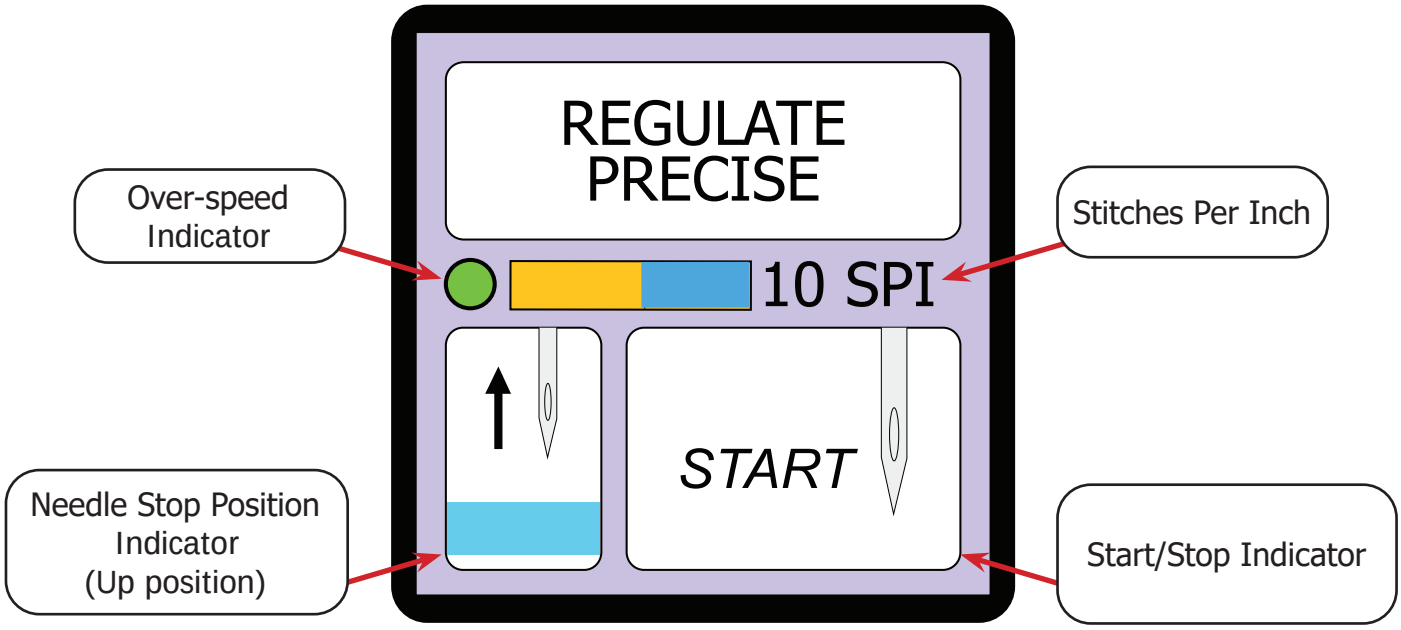

2. Confirm that your **Stitches Per Inch (SPI)** is the desired length.
   - Press the up button on the handlebars to decrease the stitch length (increase number of stitches in an inch) .
   - Press the down button on the handlebars to increase the stitch length (decrease number of stitches in an inch).

   Tip: This setting can be changed to stitches per centimeter (SPC) in the Preferences menu. See "Customizing Machine Settings" on page 52.
3. Check the **needle stop position indicator** to see if the needle will stop in the up or down position when stitching is inactive. To change the needle stop position, hold down the needle up/down button on the handlebar for three seconds.
4. Position the quilting machine over the quilt where you would like to stitch.
5. Press the start/stop quilting button on the handlebars to begin stitching. Move the machine across the quilt to place the stitches. Moving too quickly for the regulated quilting will cause a beeping alarm to sound and the **over-speed indicator** to turn red. This alarm can be disabled in the Preferences menu (see "Customizing Machine Settings" on page 52).

   Note: When quilting, the **Start/Stop indicator** will read *STOP* to let you know that stitching is active and that if you press the start/stop button on the handlebars, stitching will stop. When stitching is not active, the start/stop indicator will show *START*.

Quilting in Cruise Mode

In this mode, the quilting machine adjusts the speed of the stitching to match the quilter's movements. This keeps the stitch sizing consistent with the chosen stitch length. If the quilter stops moving, the machine will stitch in place at 5% of the machine's maximum speed. To sew in regulated cruise quilting mode, take the following steps:

1. Select Cruise from the Main Menu. The Regulated Cruise screen displays.

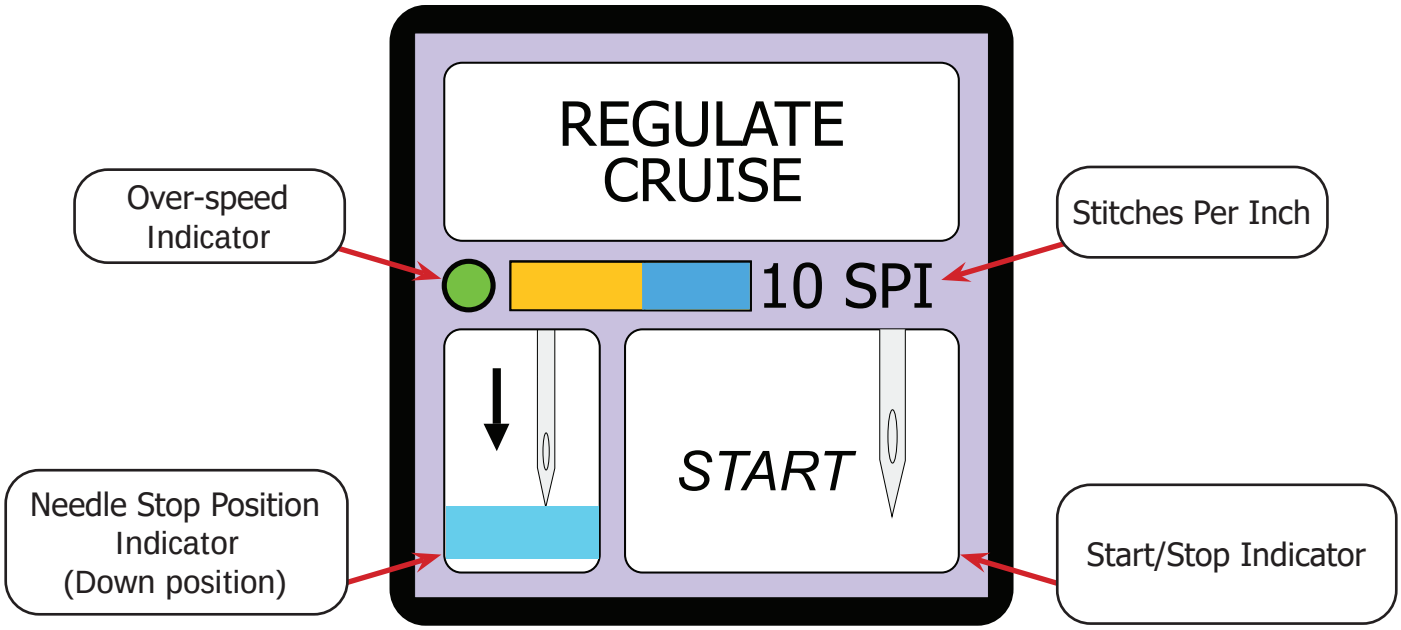

2. Check that your **Stitches Per Inch (SPI)** is the desired length.
   - Press the up button on the handlebars to decrease the stitch length (increase number of stitches in an inch) .
   - Press the down button on the handlebars to increase the stitch length (decrease number of stitches in an inch).

   Tip: This setting can be changed to stitches per centimeter (SPC) in the Preferences menu. See "Customizing Machine Settings" on page 52.
3. Check the **needle stop position indicator** to see if the needle will stop in the up or down position when stitching is inactive. To change the needle stop position, hold down the needle up/down button on the handlebar for three seconds.
4. Position the quilting machine over the quilt where you would like to stitch.
5. Press the start/stop quilting button on the handlebars to begin stitching. Move the machine across the quilt to place the stitches. Moving too quickly for the regulated quilting will cause a beeping alarm to sound and the **over-speed indicator** to turn red. This alarm can be disabled in the Preferences menu (see "Customizing Machine Settings" on page 52).

   Note: When quilting, the **Start/Stop indicator** will read *STOP* to let you know that stitching is active and that if you press the start/stop button on the handlebars, stitching will stop. When stitching is not active, the start/stop indicator will show *START*.

Using the Baste Quilting Mode

Use the baste quilting mode to create loose, temporary stitching to hold layers of fabric together while quilting.

To use the baste quilting mode, take the following steps:

1. Select Baste from the Main Menu. The Baste screen displays.

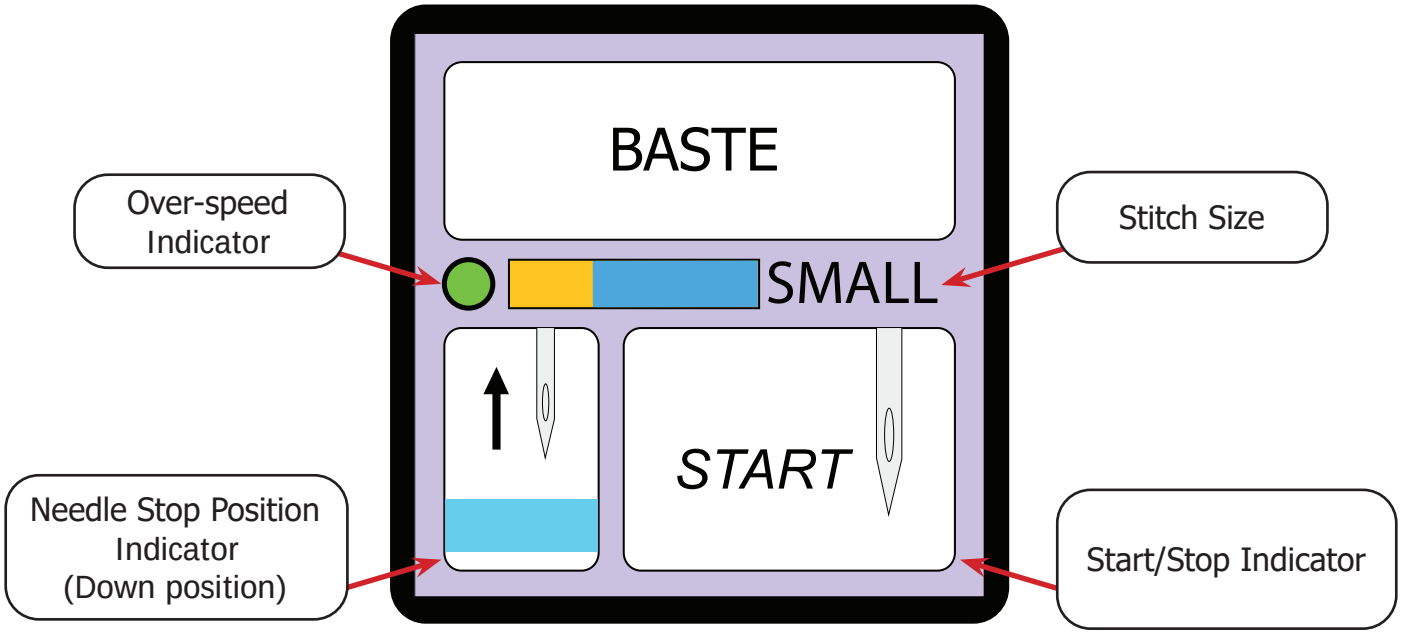

2. Check that the **stitch size** is the desired length (small, medium, or large).
   - Press the up button on the handlebars to increase the stitch length.
   - Press the down button on the handlebars to decrease the stitch length.
3. Check the **needle stop position indicator** to see if the needle will stop in the up or down position when stitching is inactive. To change the needle stop position, hold down the needle up/down button on the handlebar for three seconds.
4. Position the quilting machine over the quilt where you would like to baste.
5. Press the start/stop quilting button on the handlebars to begin stitching. Move the machine across the quilt to place the stitches. Moving too quickly for the machine's stitch length will cause a beeping alarm to sound and the **over-speed indicator** to turn red. This alarm can be disabled in the Preferences menu (see "Customizing Machine Settings" on page 52).

   Note: When quilting, the **Start/Stop indicator** will read *STOP* to let you know that stitching is active and that if you press the start/stop button on the handlebars, stitching will stop. When stitching is not active, the start/stop indicator will show *START*.

Quilting in Manual Mode

This quilting mode is the reverse of regulated. Select a speed for the machine to stitch at, and adjust your movements to create shorter or longer stitches. This mode is useful for small, continuous stippling patterns.

To use the manual quilting mode, take the following steps:

1. Select Manual from the Main Menu. The Manual screen displays.

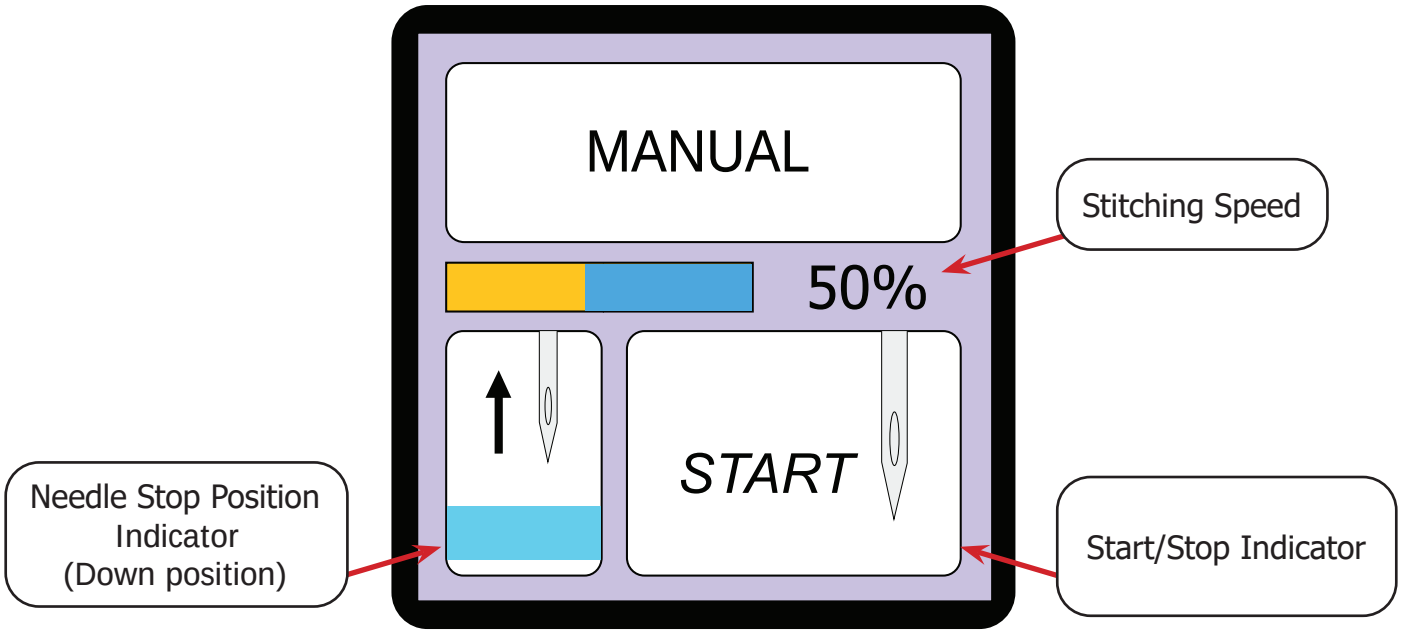

2. Check that the **stitching speed** is the desired speed. The stitching speed is displayed as a percentage of the maximum machine speed of 1800 stitches per minute.
   - Press the up button on the handlebars to increase the stitching speed.
   - Press the down button on the handlebars to decrease the stitching speed.
3. Check the **needle stop position indicator** to see if the needle will stop in the up or down position when stitching is inactive. To change the needle stop position, hold down the needle up/down button on the handlebar for three seconds.
4. Position the quilting machine over the quilt where you would like to stitch.
5. Press the start/stop quilting button on the handlebars to begin stitching. Move the machine across the quilt to place the stitches. Moving quickly will create larger stitches. Moving slowly will create smaller stitches.

   Note: When you're quilting, the **Start/Stop indicator** will read *STOP* to let you know that stitching is active and that if you press the start/stop button on the handlebars, stitching will stop. When stitching is not active, the start/stop indicator will show *START*.

Adjusting Thread Tension

Proper thread tension prevents unwanted puckering, poorly-formed stitches, and malfunctions that can damage the fabric and the quilting machine. Test your thread tension on extra materials before sewing on a project.

Tip: Bottom thread tension is addressed in "Loading the Bobbin Case" (see page 29). This should be established before taking the following steps.

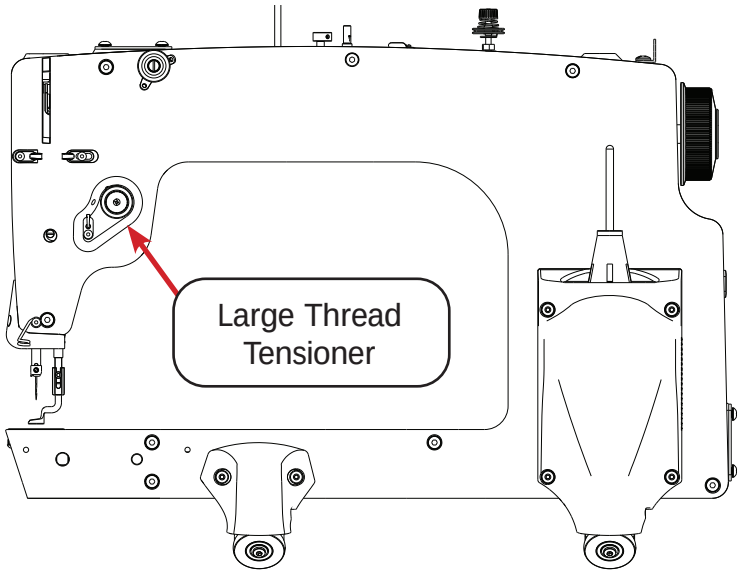

1. Loosen the **tension knob** on the **large thread tensioner** to set the tension to "**1.**" The bottom of the tension knob will line up with the number that the tension is set to.

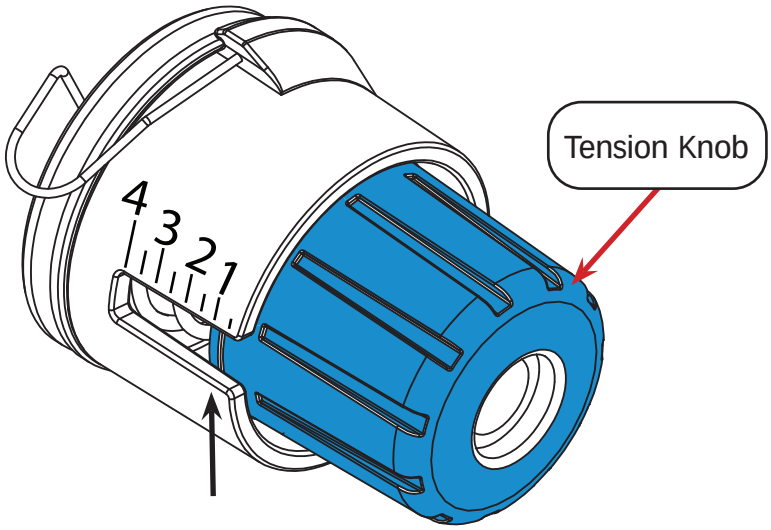

Note: Setting "**1**" is the lowest tension for your machine, and is an ideal starting place to find the correct top tension.

2. Slowly increase the tension while stitching into scrap material. When the thread tension is balanced, the top and bottom thread (shown in blue and red) will knot in the middle of the fabric layers.

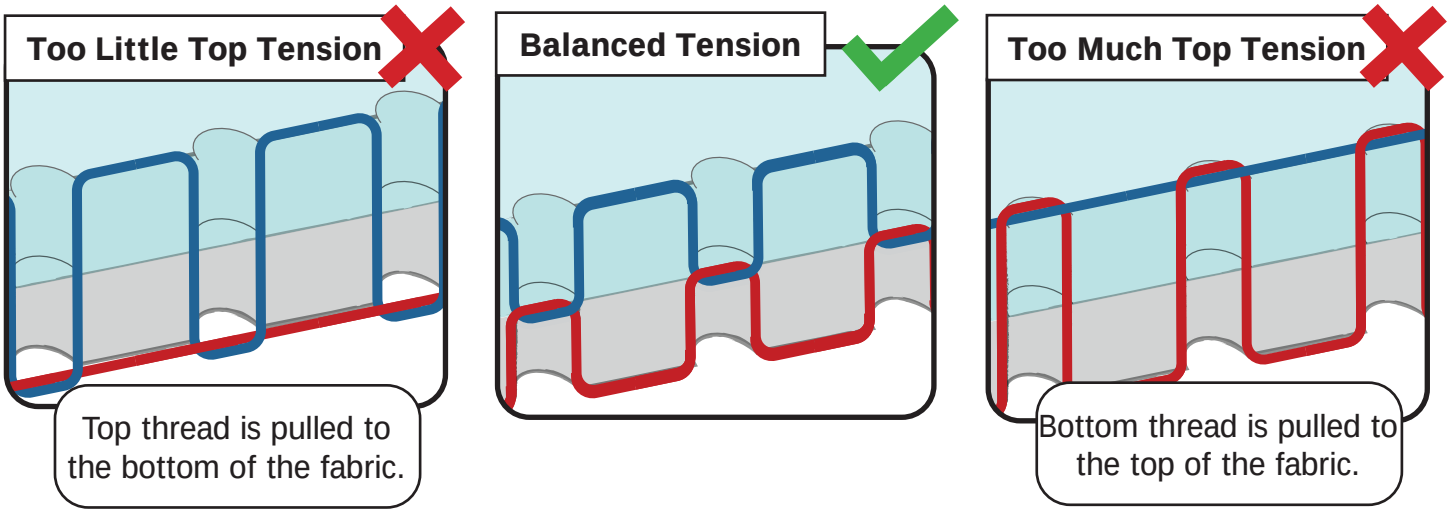

- If the **bobbin (bottom) thread** (shown in red) is pulled through the top layer of fabric, there is too much top tension. Loosen the tension by turning the large thread tensioner knob toward setting "1."
- If the **top thread** (shown in blue) is pulled down through the bottom layer of fabric, there is too little top tension. Increase the tension on the top by turning the large thread tensioner knob toward setting "4."

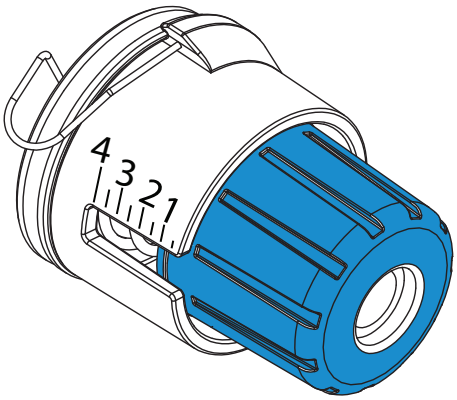

Using The Tools Menu

The Tools menu provides access to the Stitch/Time feature, System Information, Diagnostics tests, and Preferences.

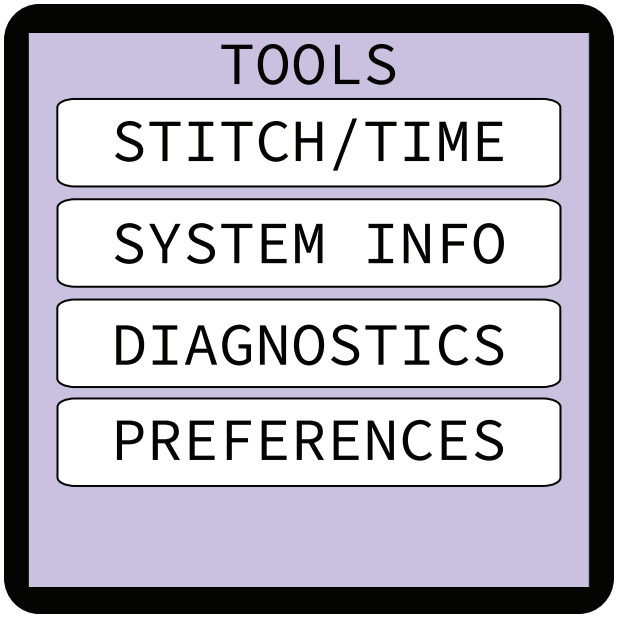

- **Stitch/Time** can be used as a timer, and to track the number of stitches sewn and hours machine has run.
- **System Information** displays the control firmware versions for the machine motor and the OLED Display.
- **Diagnostics** tests should be used at the direction of a Grace Company technician to troubleshoot problems with the machine.
- **Preferences** is where machine defaults can be customized.

Tracking Stitch/Time Count

The Stitch/Time tool is reached by choosing Tools from the Main Menu, and then by selecting Stitch/Time.

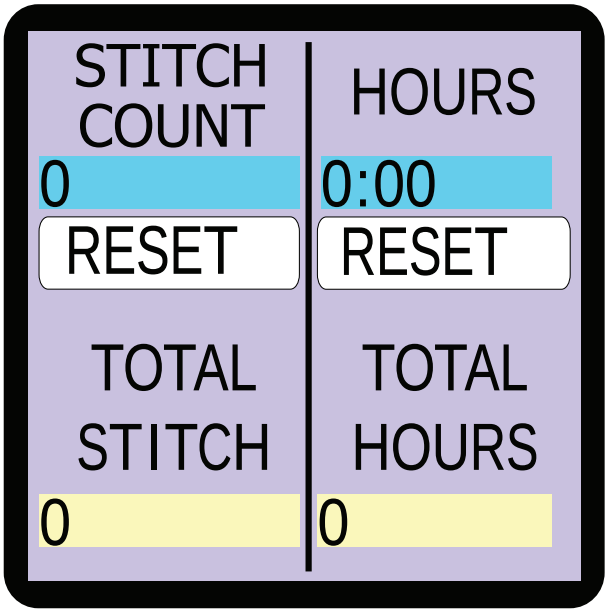

This tool tracks the total hours the machine has run, and the total stitch count. These are displayed at the bottom of the screen and cannot be reset.

It can also be used to track the stitch or hour count for individual projects. Select Reset to return the Stitch Count to 0 or Hours to 0:00.

Tip: It's recommended to oil your machine after 20 hours of use. The Tracking Stitch/Time count can help keep track of when your machine is due to be oiled.

Customizing Machine Settings

Machine defaults can be customized in the Preferences menu. Access the Preferences menu by choosing Tools from the Main Menu, and then selecting Preferences.

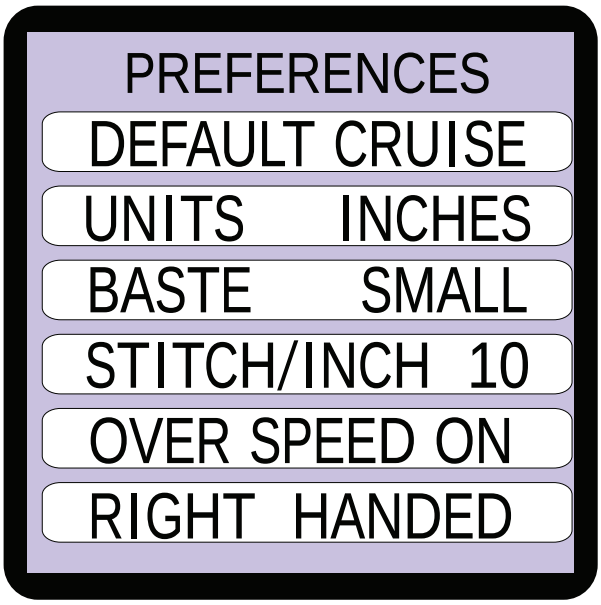

Here are a list of the options available for each setting:

- **Default:** This setting determines the quilting mode or menu the machine will use automatically when powered up. The default can be set to: precise, cruise, baste, menu, or manual by pressing select on the handlebar controls.
- **Units:** Use this setting to switch between inches and metric (centimeters).
- **Baste:** This setting will determine the preset stitch size for the baste quilting mode. It can be set to small, medium, or large.
- **Stitch / Inch:** Determines the preset number of stitches per inch when using the regulated precise or regulated cruise quilting mode. The SPI (stitches per inch) can range from 4 to 16. If changed to centimeters using the Units setting above, this setting can range from 1.5 to 6.2 stitches per centimeter (SPC).
- **Over Speed:** Select to turn on or off the over-speed indicator in regulated precise or regulated cruise quilting modes.
- **Right-Handed** or **Left-Handed:** This will reverse the buttons handlebar controls.

Maintaining the Machine

Keep your machine performing at its peak by practicing good machine maintenance habits.

Preparing the Oil Bottle .....page 54

Oiling and Cleaning .....page 55

Changing the Needle .....page 59

Adjusting the Bobbin Cam .....page 62

Adjusting the Hopping Foot.....page 63

Reinstalling the Needle Plate .....page 66

This section of the manual covers changing the sewing needle, oiling the machine, adjusting the bobbin cam and hopping foot, and reinstalling the needle plate.

Preparing the Oil Bottle

Parts & Tools Needed:

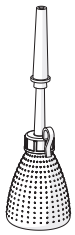

Oil Bottle

Instructions

1. Snip off about 1/4th of an inch from the tip of the plastic lid with a pair of scissors.

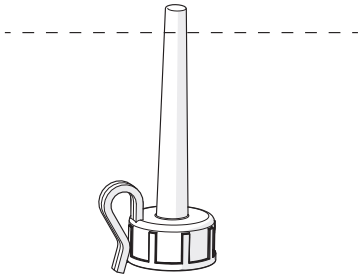

2. Place the applicator needle onto the top of the cap.

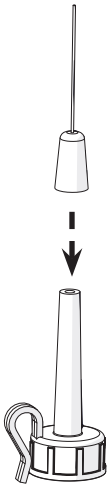

3. Peel the safety foil off the opening of the oil bottle.

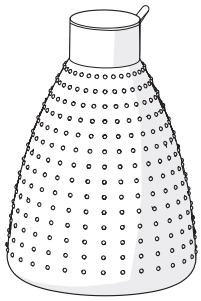

4. Carefully screw the lid onto the oil bottle.

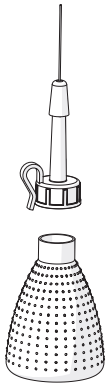

5. Hold bottle upside down and squeeze gently to apply oil. When not in use, cover the applicator needle with the safety cap.

Oiling and Cleaning

Parts & Tools Needed:

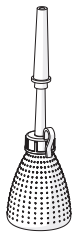

Oil Bottle

Lint Brush

Instructions

Oil and Clean:	
Machine	• At the start of a new project • After 20 hours of use • After sitting without use for more than 30 days
Bobbin Case	• Every other bobbin change

Tip: The Stitch/Time feature in the Tools menu can be used to track hours of quilting time (see "Tracking Stitch/Time Count" on page 51).

1. Power off the machine.
2. Set the **large thread tensioner** to "1" to expose the **tensioner discs**. Use the lint brush or a can of compressed air to clear away lint and thread remnants.

   Note: Lint build-up between the tensioner discs can prevent proper thread tensioning.

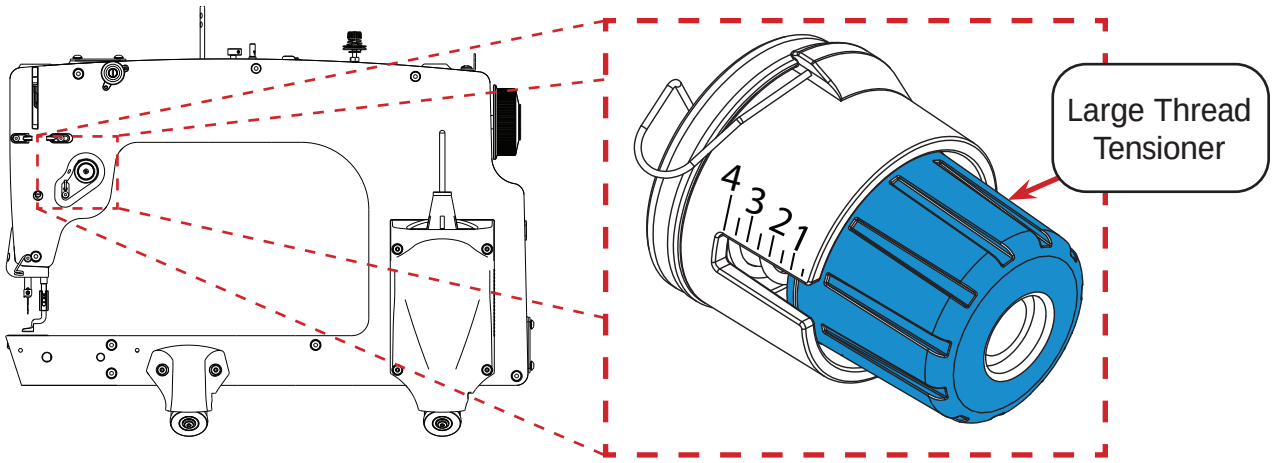

3. Clear debris from the spring and discs of the **small thread tensioner** with the lint brush or compressed air.

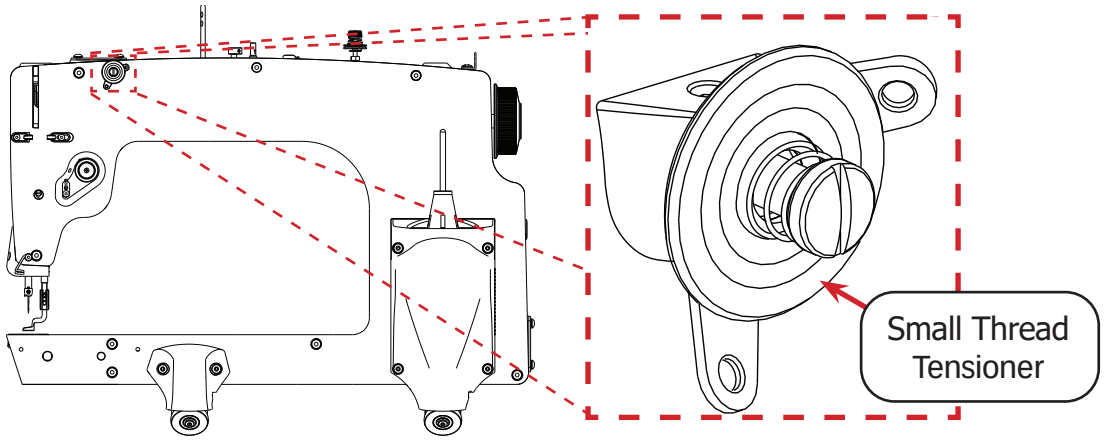

4. Pull the **lever** (shown in blue) on the bobbin case to remove it from the hook assembly.

   Note: If the case won't release, try raising the needle.

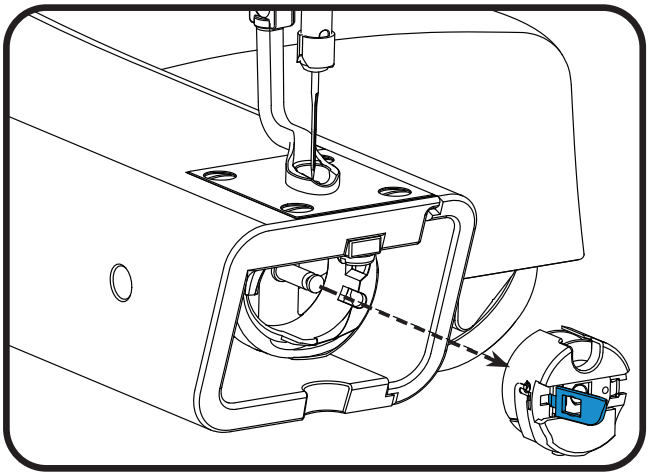

5. Take the bobbin from the case and set it aside. Clean the bobbin case with the lint brush or compressed air. Be sure to clean the area under the **bobbin thread tension arm**.

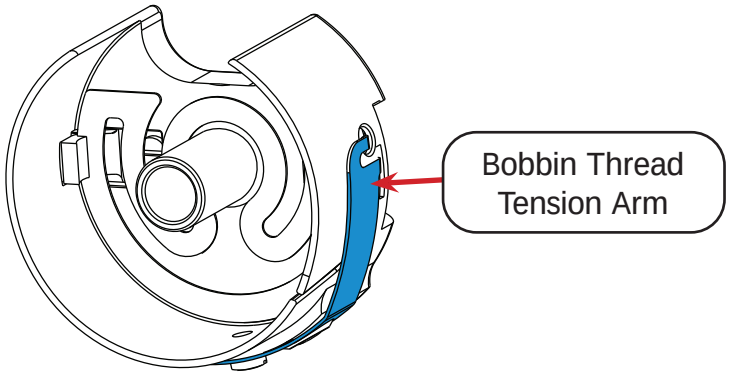

6. In and around the **hook assembly**, clear away any lint, cloth, and thread remnants using the lint brush or compressed air.

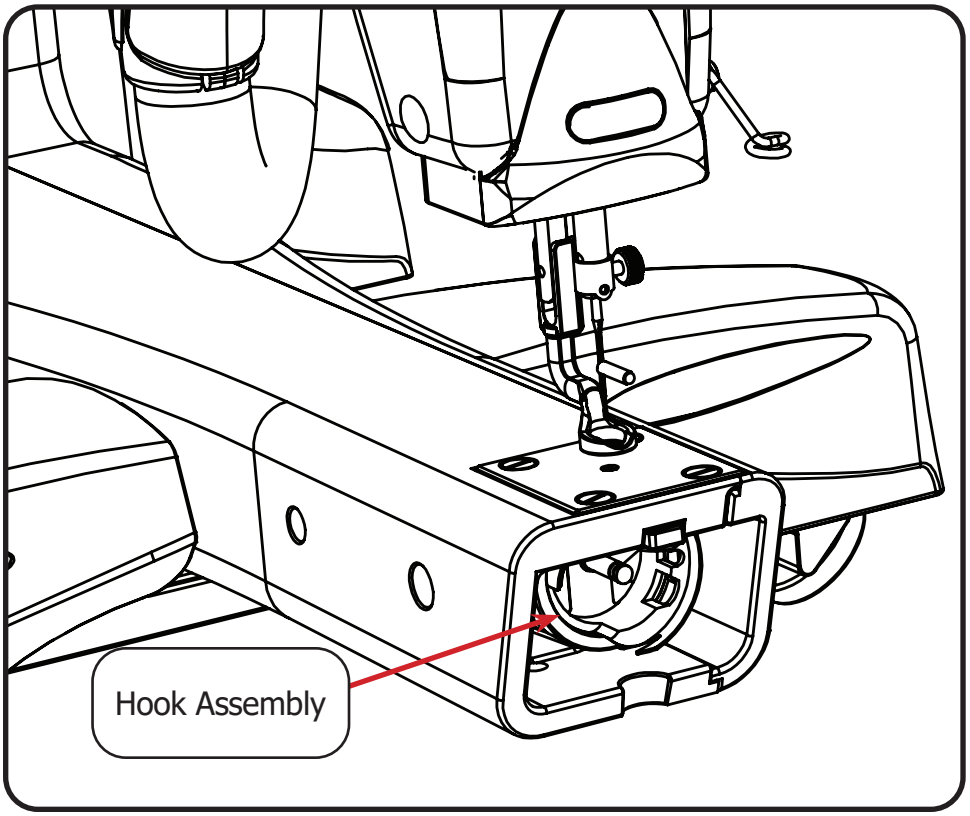

7. Rotate the hand wheel until the needle is halfway down. This will put the hook in the best position for oiling.
8. Place one to two drops of oil into the hook assembly between the **inner part** (shown in blue) and **outer part** (shown in gray).

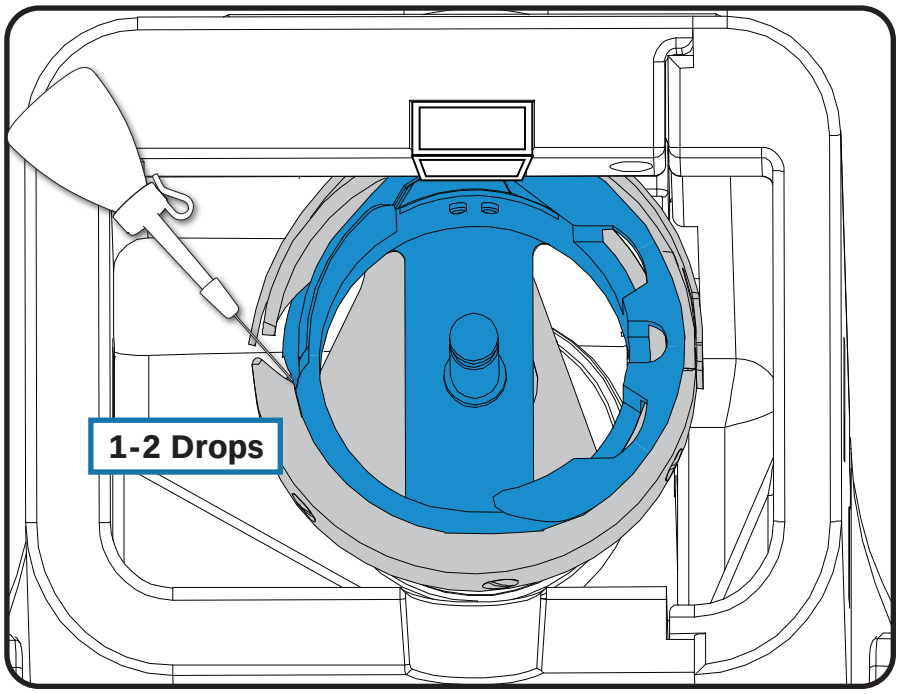

9. Reload the bobbin case and return it to the machine. For detailed instructions, see "Loading the Bobbin Case" on page 29.

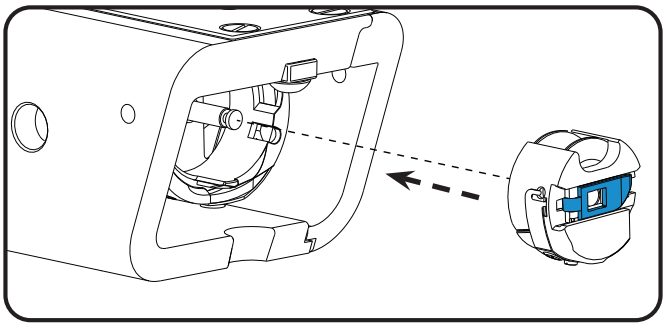

10. Tilt back the display to reveal two holes underneath. Place 1-2 drops of oil into both holes.

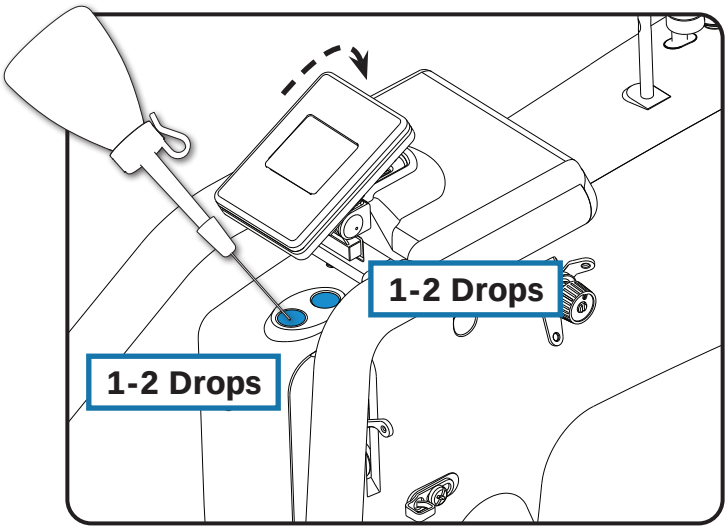

11. Power up the machine and test a few stitches to ensure the machine is running smoothly.

Changing the Needle

Parts & Tools Needed:

Needle

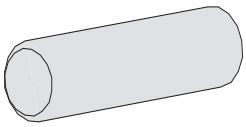

Needle Magnet

Instructions

A broken, bent, or burred needle can damage the fabric, break thread, or even damage the machine. Always check that the needle is in good repair before starting a new project.

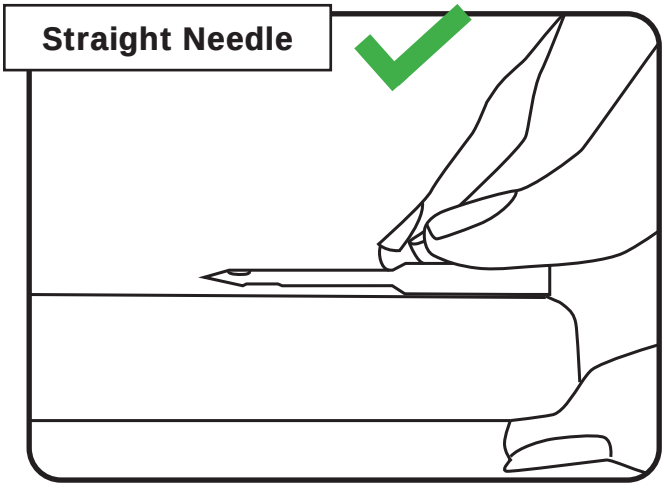

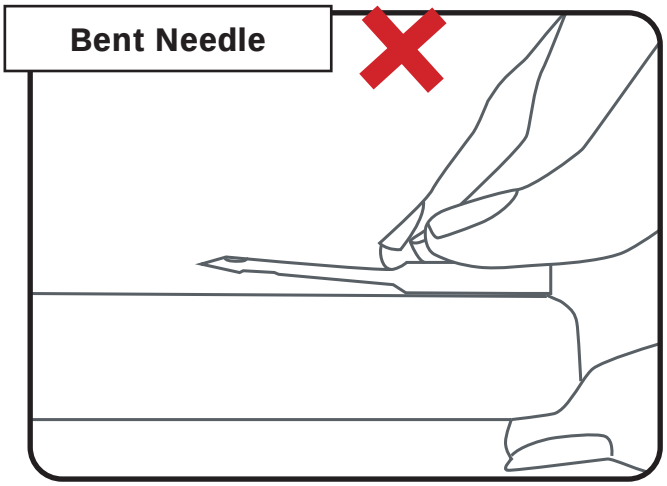

To avoid damage to the machine, please choose an approved needle style from the list below:

- DPx5 MR
- 135x17 MR
- DPx17 MR
- 135x17 SAN 11
- 3355 MR

Note: For more information on selecting a needle, see "Choosing Your Needle" on page 89.

To change the needle on your quilting machine, take the following steps:

1. Power off the machine.
2. Raise the needle to the highest position with the hand wheel.
3. Loosen the **needle thumb screw**. If needed, use a flat-head screwdriver.

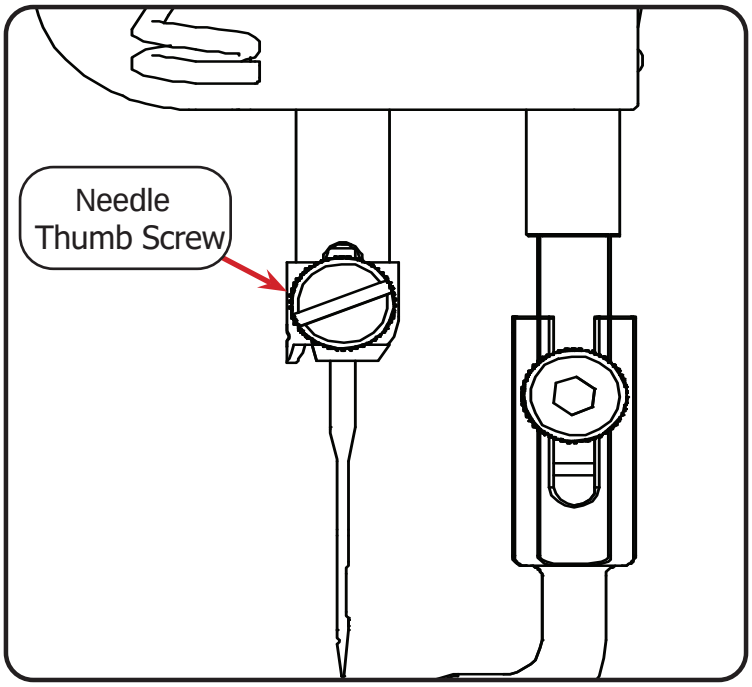

4. Pull down on the needle to remove it from the needle bar.

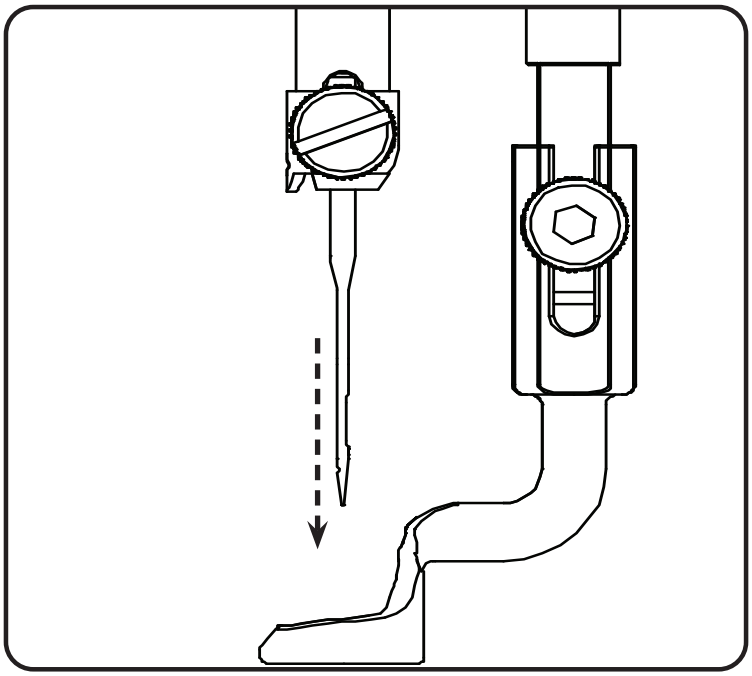

5. On the new needle, place the **needle magnet** above the eye, on the **groove** (shown in blue).

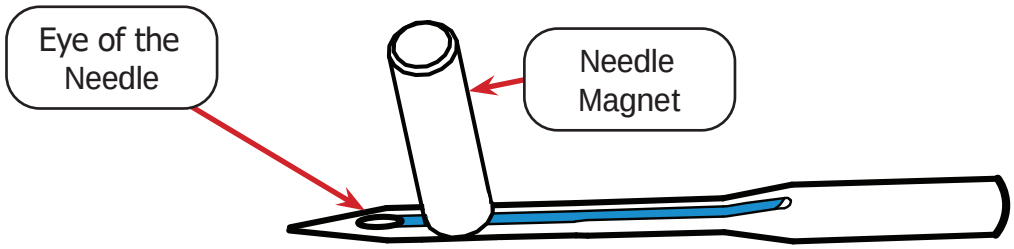

6. Insert the new needle so the groove and **needle magnet** are pointed to the front of the machine. The needle should be inserted all the way into the needle bar. Look through the **needle bar sight hole** to make sure the needle is all the way inside the needle bar.

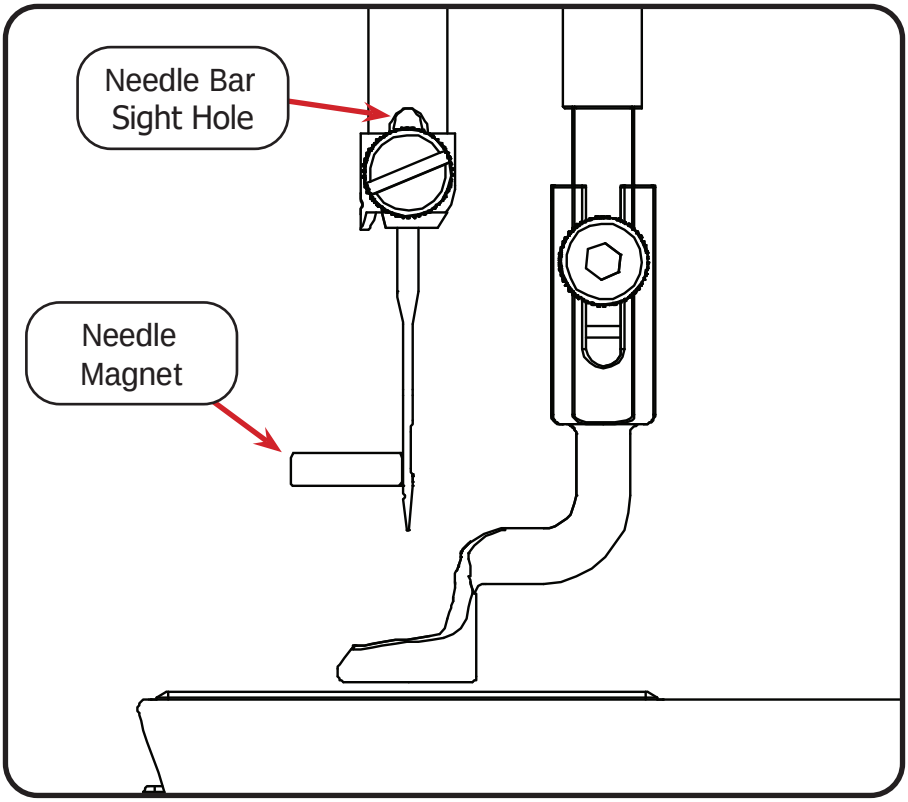

7. Adjust the needle so the magnet to points as straight out from the machine as possible.
8. Hand-tighten the thumb screw. Do not over-tighten if using the flat-head screwdriver.

Adjusting the Bobbin Cam

Parts & Tools Needed:

- 1.5 mm Allen Wrench (not included)

Instructions

The machine's bobbin cam is set so the bobbin will wind completely before thew winder automatically shuts off. To change how much the bobbin fills before the winding stops, take the following steps:

1. Power off the machine.
2. Place an empty bobbin onto the bobbin stand and flip the bobbin winder cam toward the bobbin. This will help estimate how far to adjust the bobbin cam.

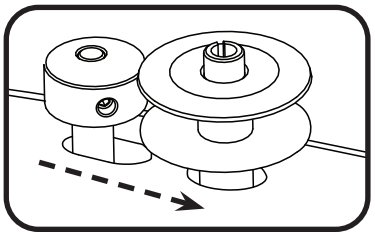

3. Loosen the **set screw** on the bobbin cam with a 1.5 mm Allen wrench until the top of the bobbin cam twists freely.

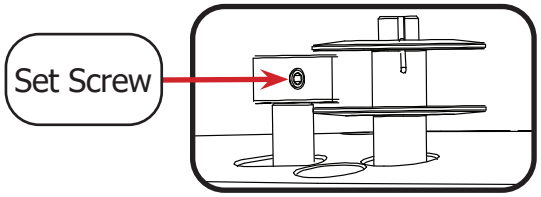

4. Point the set screw toward the bobbin to decrease the amount the bobbin will fill before the winder shuts off. Point the set screw away from the bobbin to increase the fill amount.

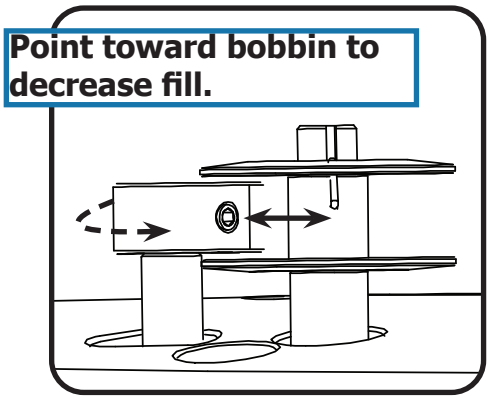

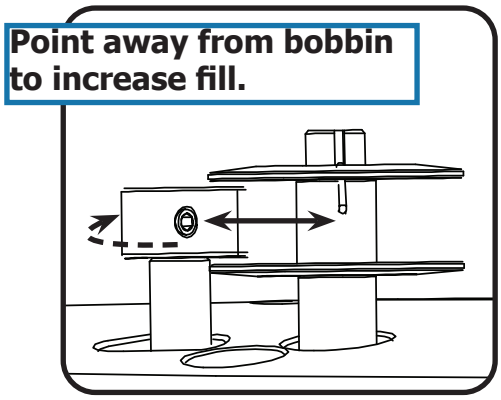

5. After choosing the desired distance, tighten the set screw with a 1.5 mm Allen Wrench.

Adjusting the Hopping Foot

Parts & Tools Needed:

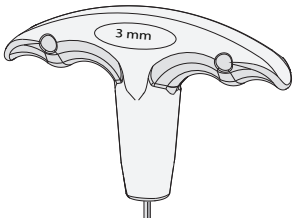

3 mm T-handle Allen Wrench

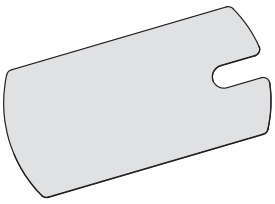

Hopping Foot Height Gauge

Adjustment Instructions

When quilting with thicker fabric or batting layers, the hopping foot may begin to drag from pressing down on the quilt too tightly. Alternatively, if the hopping foot is set too high, skipped stitches can result. The hopping foot can be raised or lowered to correct these problems.

To adjust the hopping foot height, take the following steps:

1. Loosen the **thumb screw** that holds the **hopping foot** to the presser bar.
2. Raise or lower the hopping foot to the desired height. **Note:** If quilting on standard batting with two fabric layers, place the provided hopping foot height gauge underneath the hopping foot to obtain the correct height.

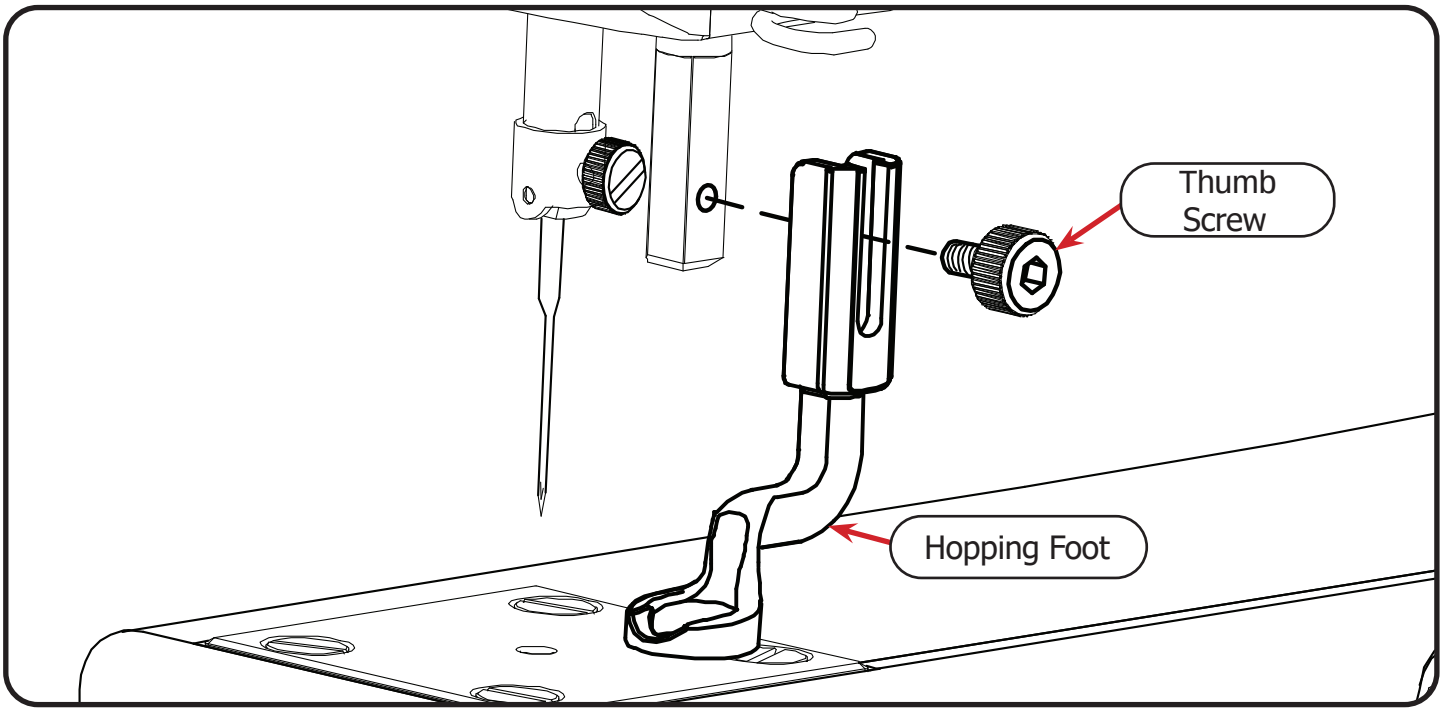

3. Hold the hopping foot in place and tighten the thumb screw with the 3 mm Allen wrench.

Removal Instructions

If the hopping foot becomes damaged or misaligned, it may need to be replaced or removed and then reinstalled. To remove the hopping foot, take the following steps:

1. Power off the machine.
2. Rotate the hand wheel to lift the needle from the inside of the hopping foot.
3. Use the 3 mm Allen wrench to remove the **thumb screw** holding the **hopping foot**.

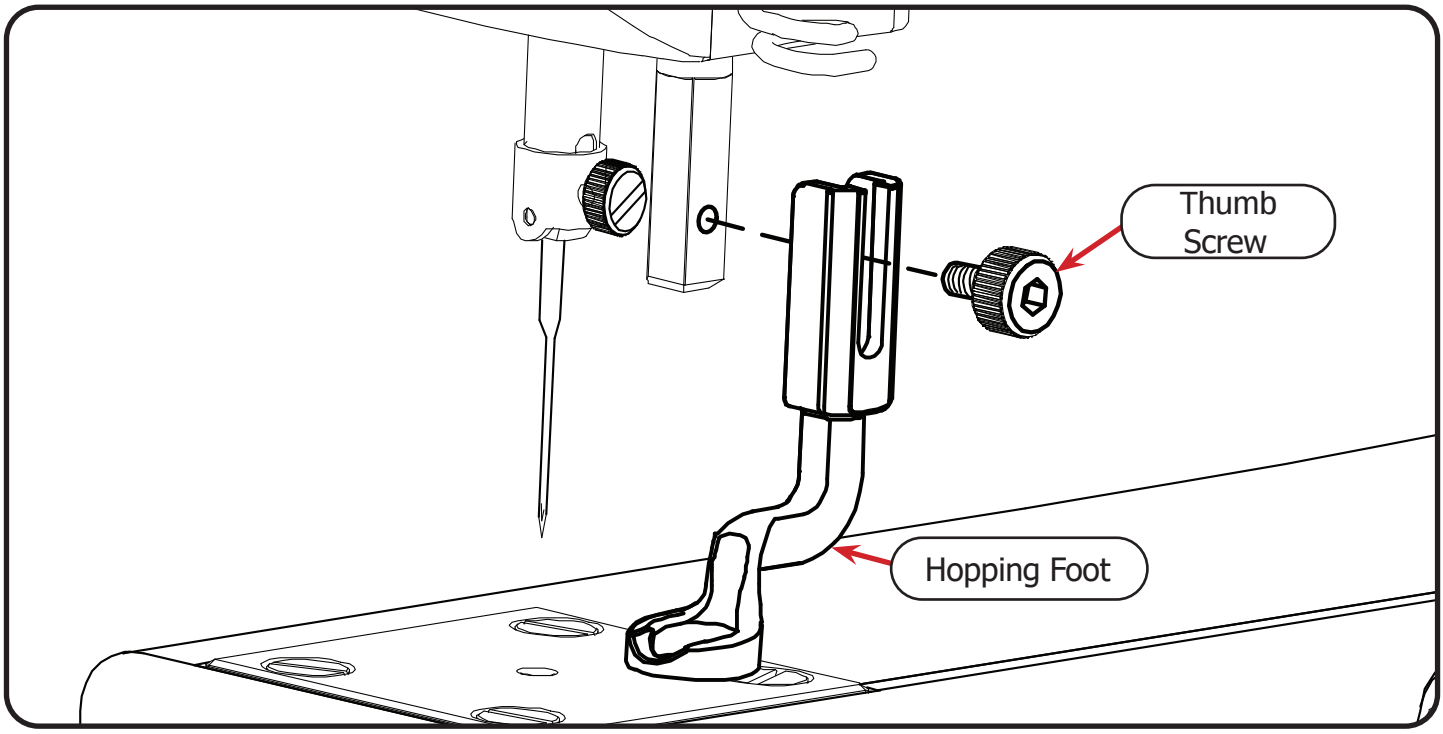

4. The hopping foot should now slide free from the presser bar.

Installation Instructions

To install the hopping foot on your quilting machine, please take the following steps:

1. Power off the machine.
2. Remove the needle. See "Changing the Needle" on page 59 for detailed instructions.
3. Rotate the hand wheel to drop the needle bar to the lowest position.
4. Place the **hopping foot height gauge** on top of the needle plate.

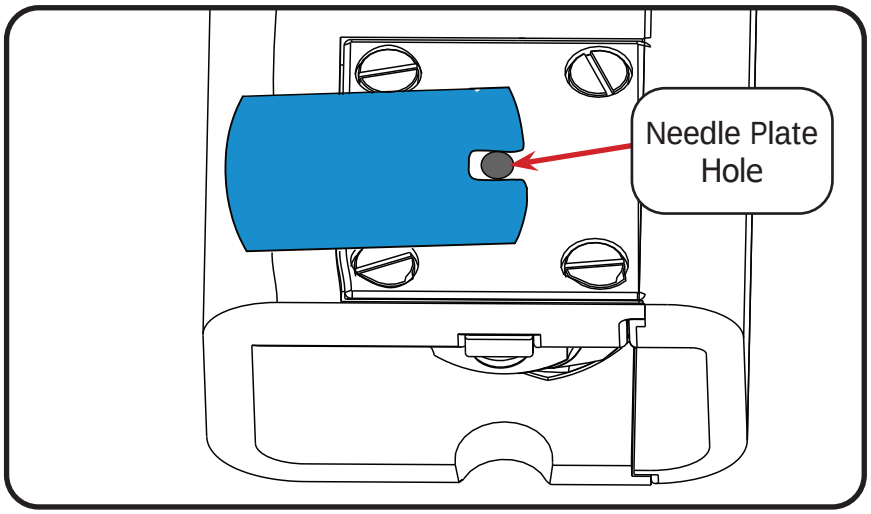

5. Slide the **hopping foot** to the **presser bar**, on top of the height gauge.
6. Tighten the **thumb screw**.

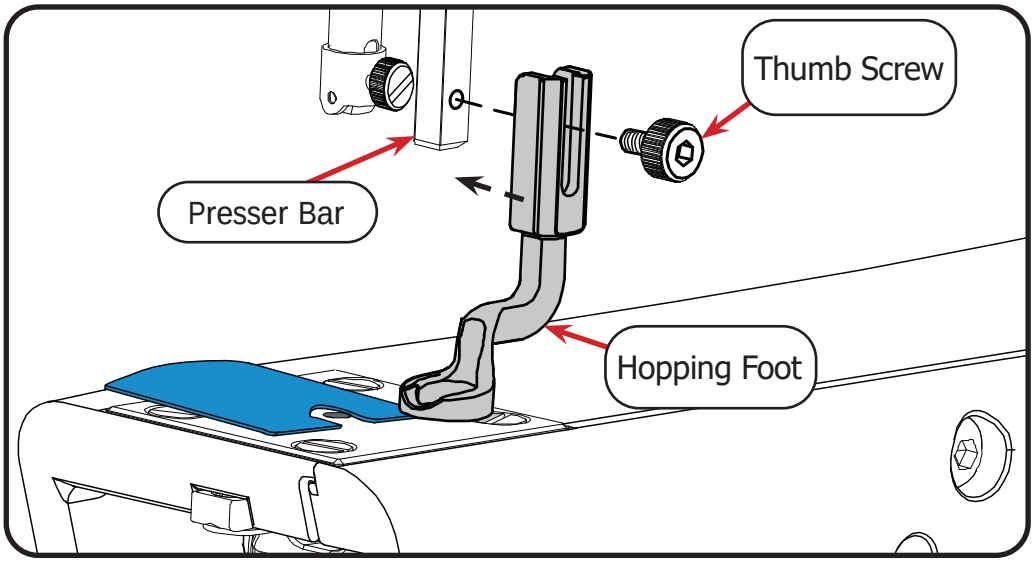

Reinstalling the Needle Plate

Parts & Tools Needed:

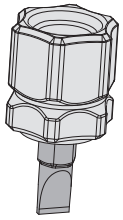

Flat-head Screwdriver

Removal Instructions

To remove the needle plate from the quilting machine, take the following steps:

1. Power off the machine and raise the **needle** to the highest position using the hand wheel.
2. Use the flat-head screwdriver to remove the four **needle plate screws** (shown in gray).
3. Slide the **needle plate** from the machine.

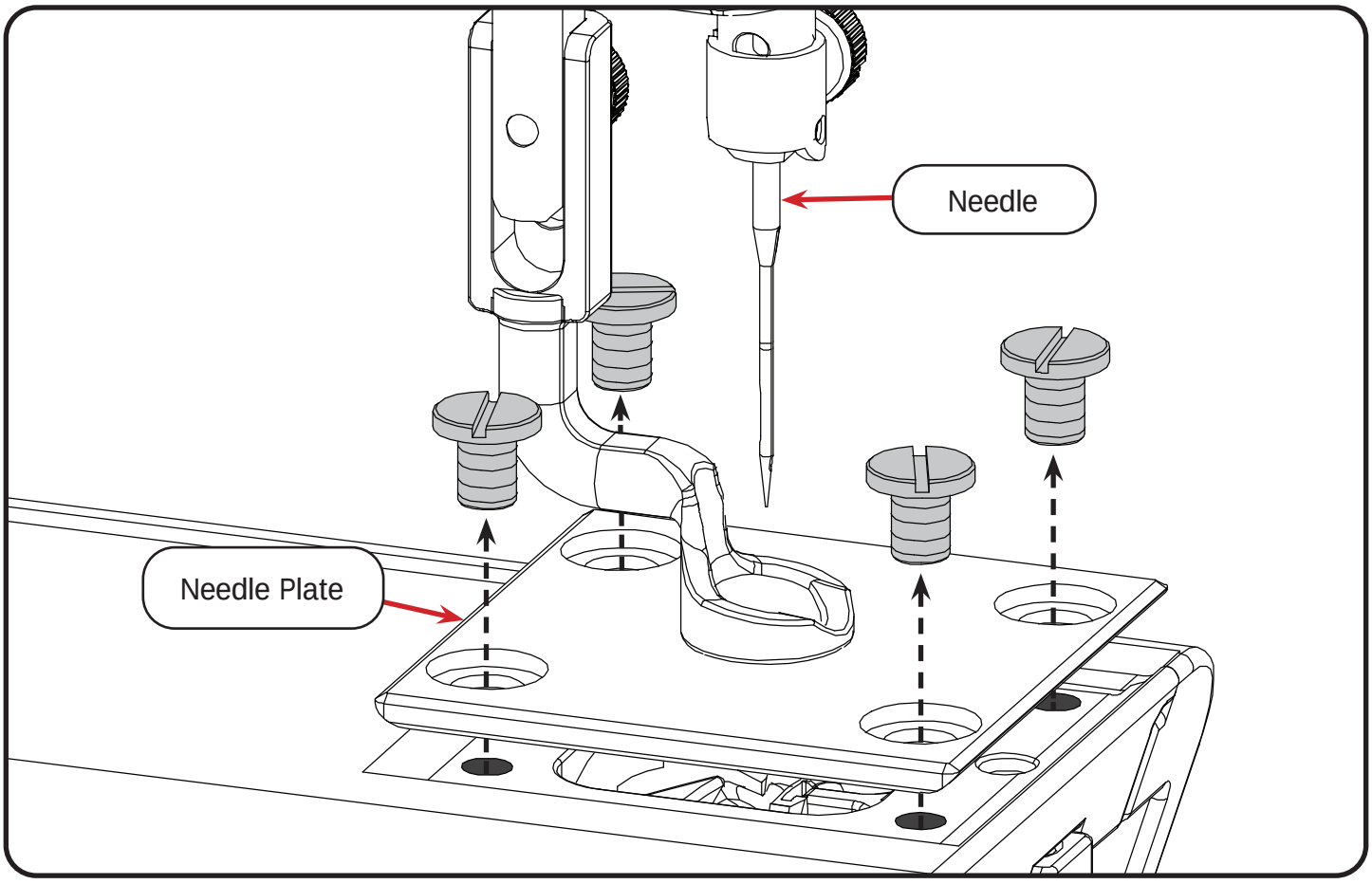

Installation Instructions

To install the needle plate onto the quilting machine, take the following steps:

1. Power off the machine and raise the **needle** to the highest position using the hand wheel.
2. Place the **needle plate** onto the machine and align the **four screw holes**.

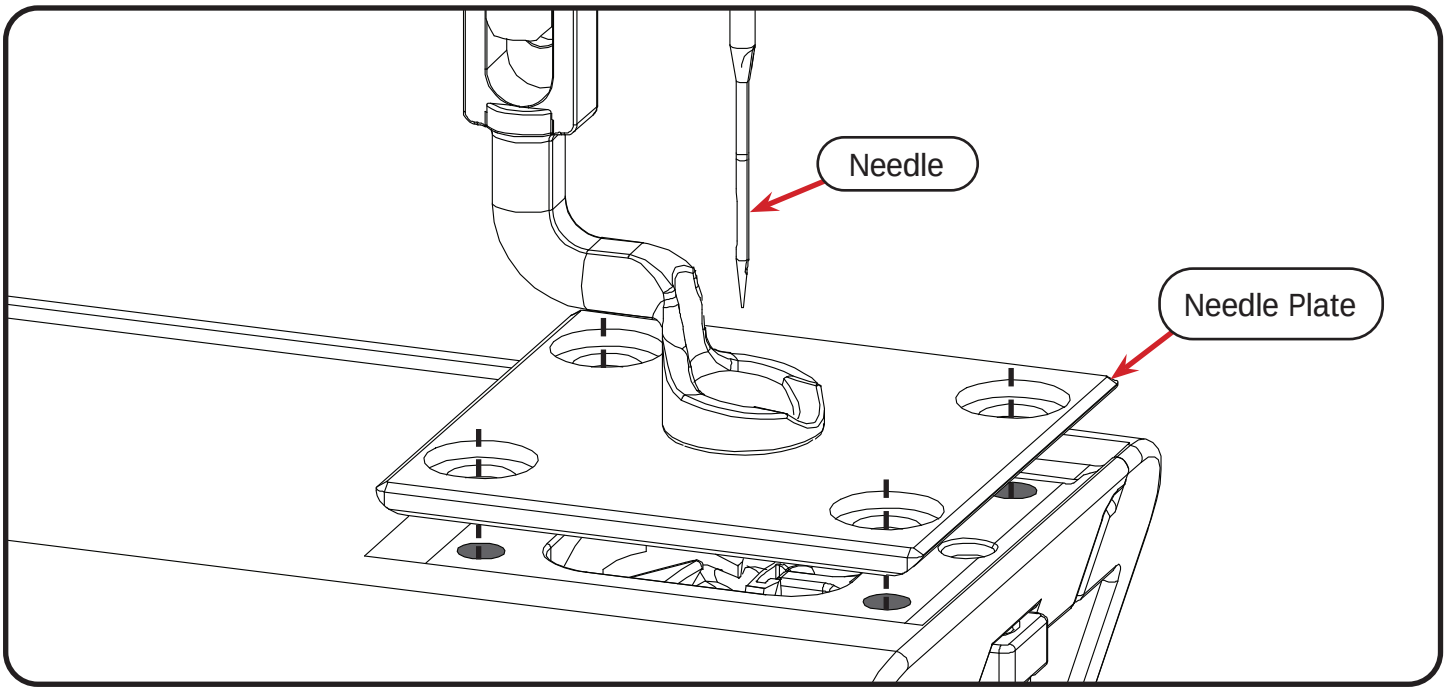

3. Slowly lower the needle with the hand wheel. The needle should slide into the center hole of the needle plate without contacting the plate.

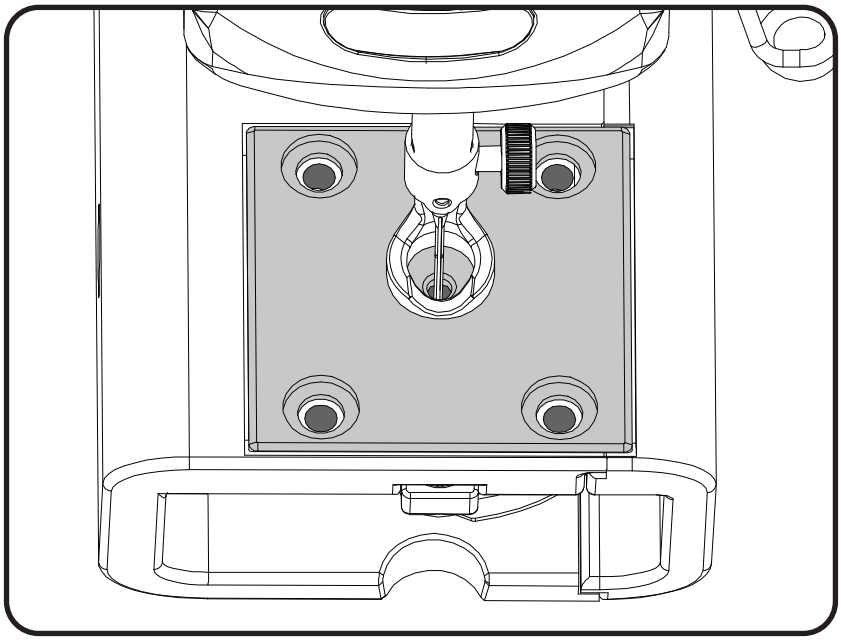

4. Place the four **needle plate screws** (shown in gray) into the plate. Make sure the needle plate is centered around the needle, and then tighten the screws with the flat-head screwdriver.

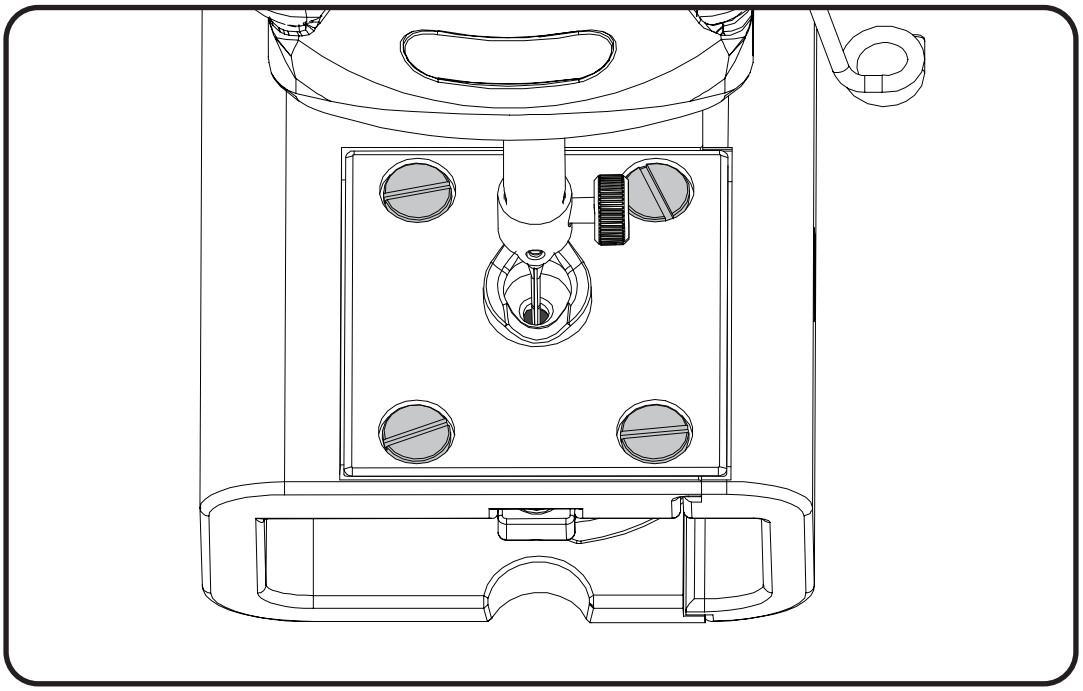

Repairs and Diagnostics

The instructions in this section should only be taken at the direction of a Grace Company support technician. If you are experiencing problems with your machine, please contact our technical support team:

- **Phone:** (800) 264-0644
- **Email:** support@graceframe.com

Repair Kit.....page 70

Checking the Firmware .....page 71

Running Diagnostics.....page 72

Replacing the Encoder Spring .....page 76

Reinstalling the Hook Holder .....page 81

Timing the Machine.....page 84

This section of the manual covers checking the machine and display firmware, running the diagnostics tests, replacing the encoder spring, reinstalling the hook holder, and timing the machine.

Repair Kit

Every machine includes a basic repair kit with parts to help with maintenance and simple repairs.

Needle Thumb Screw - 1 A replacement for the needle bar set screw. If the thumb screw is overtightened, it will strip out and will need to be replaced.	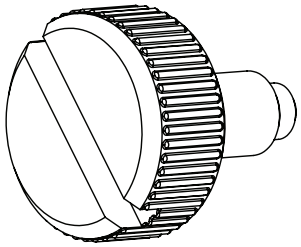
Encoder Springs - 1 Black / 1 Silver Replacement springs for the encoders. If the encoder springs are over-tensioned, they may break and will need to be replaced.	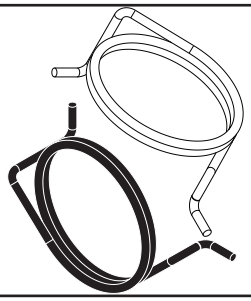
Timing Spacer - 1 A tool to help in timing your machine.	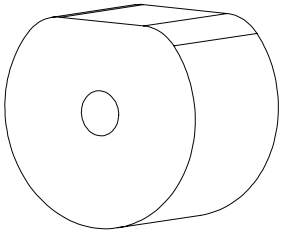
Hopping Foot Height Gauge - 1 A tool to help set the Hopping Foot height on your machine.	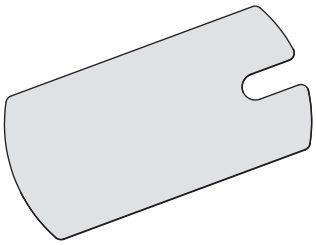

Checking Firmware

The control firmware versions for the machine motor and the OLED Display are found by selecting Tools from the Main Menu, and choosing System Info.

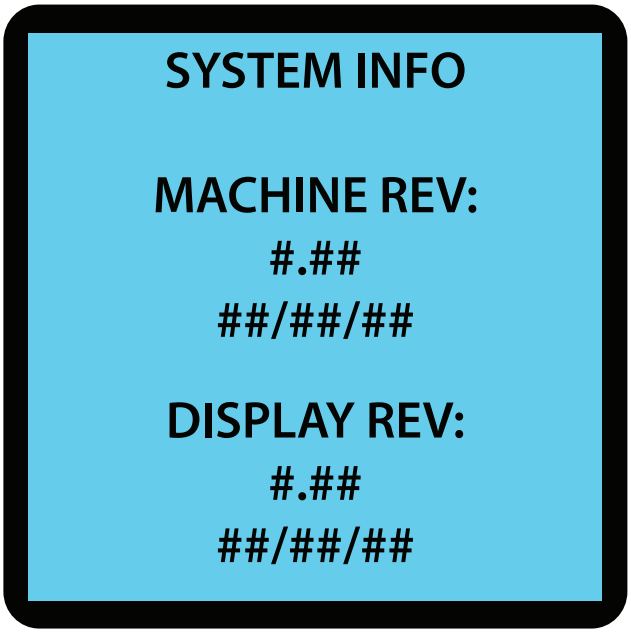

Running Diagnostics

Diagnostics tests can be reached by selecting Tools from the Main Menu and choosing Diagnostics. Run diagnostics tests at the direction of a Grace Company technician only to troubleshoot problems with the machine.

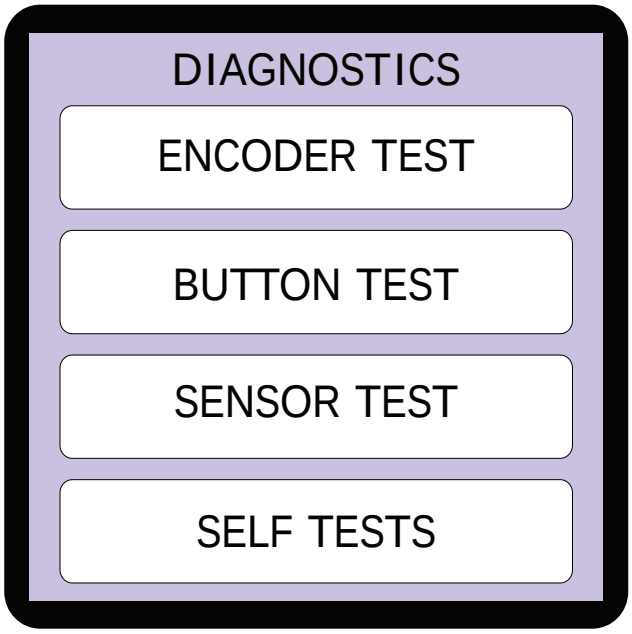

The following options display on the Diagnostics screen:

- **Encoder Test**: Select to test that each encoder is working correctly.
- **Buttons Test**: Select to test that the handlebar buttons are working.
- **Sensor Test**: Choose to test that the needle sensor is functioning.
- **Self Tests**: Select to prompt the machine to run self diagnostic tests.

Encoder Test Instructions

To access the encoder test, choose Diagnostics from the Tools menu.

1. The Encoders test screen displays.

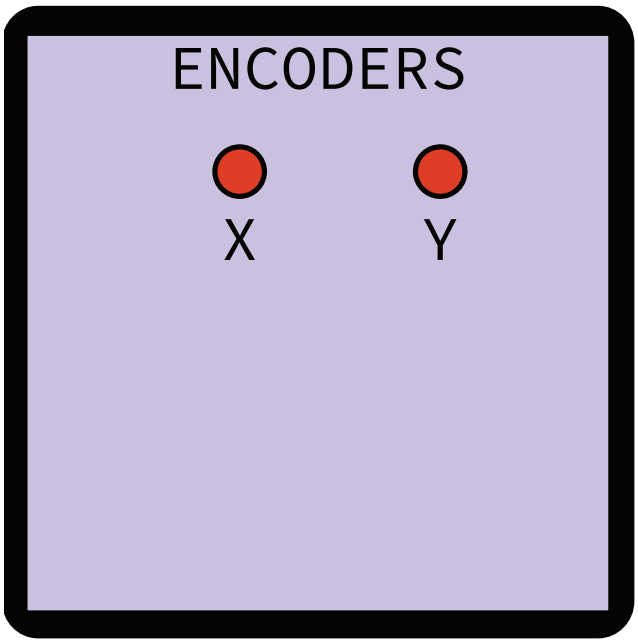

2. Move the machine left and right across the frame. The X indicator should turn green while the machine is moving.

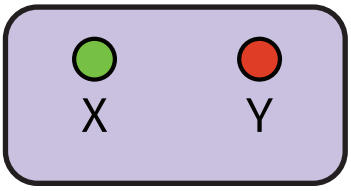

3. Move the machine from front to back across the frame. The Y indicator should turn green while the machine is moving.

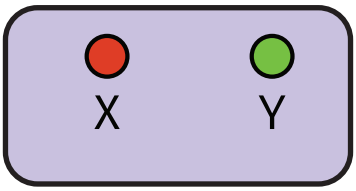

Button Test Instructions

To access the Buttons test, choose Diagnostics from the Tools menu.

1. The Buttons test screen displays.

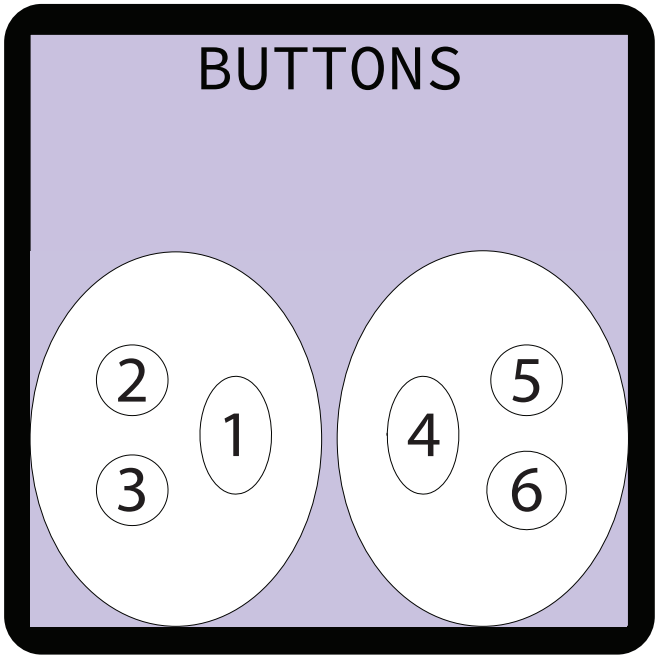

2. Press each button on the handlebar. The corresponding button indicator will turn green.

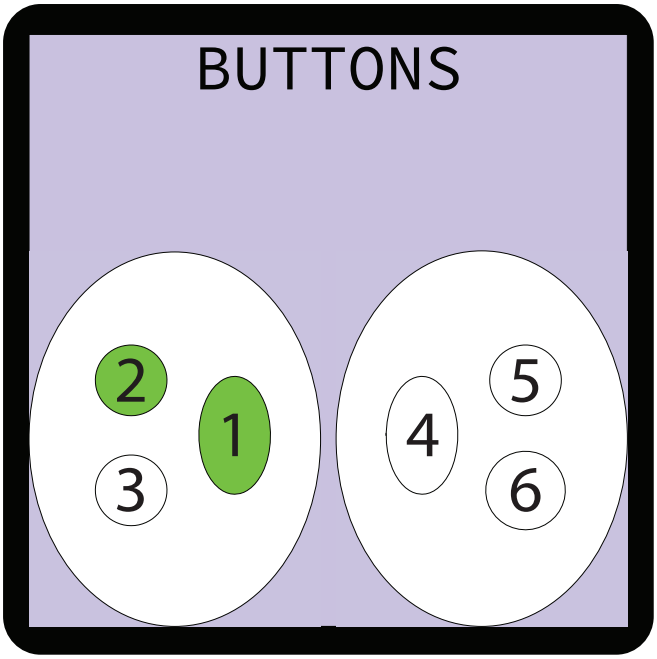

Sensor Test Instructions

To access the Sensors test, choose Diagnostics from the Tools menu.

1. The Sensors test screen displays.

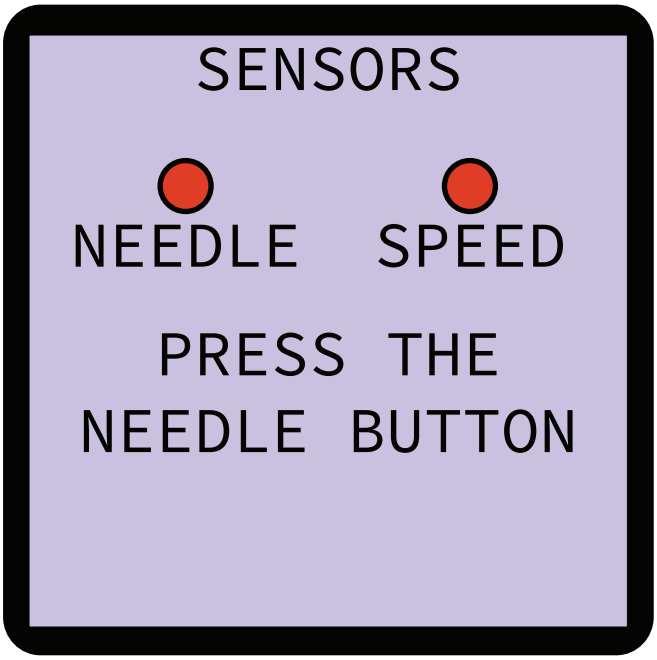

2. Press the needle button (large button on the left handlebar).
   - The needle will drop to the bottom position.
   - The speed indicator will flash green, followed by the needle indicator.
3. Press the needle button again.
   - The needle will raise to the highest position.
   - The speed indicator will flash green and then the needle indicator will flash green.

Replacing the Encoder Spring

Please speak to a Grace Company support technician before attempting these instructions.

Parts & Tools Needed:

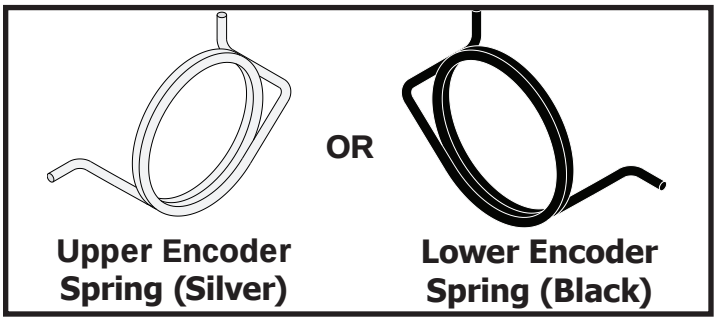

Upper Encoder Spring (Silver)

Lower Encoder Spring (Black)

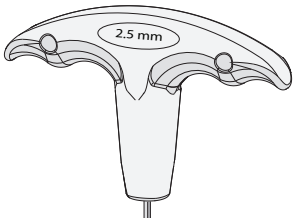

2.5 mm T-handle Allen Wrench

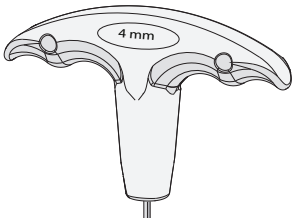

4 mm T-handle Allen Wrench

Instructions

If the encoder spring is over-tensioned, it may break and need to be replaced.

To replace the encoder spring, take the following instructions:

1. Determine the correct spring to use in the repair:
   - **Upper Encoder**: Attached to the wheel on the machine. Use the silver spring.
   - **Lower Encoder**: Attached to the wheel on the bottom carriage. Use the black spring.
2. Unplug the encoder cable from the machine.
3. Loosen the **lock collar set screw** with the 2.5 mm Allen wrench until the **lock collar** (shown in blue) can twist freely. **Note:** Depending on your machine model, this step may require the 2.0 mm Allen wrench.

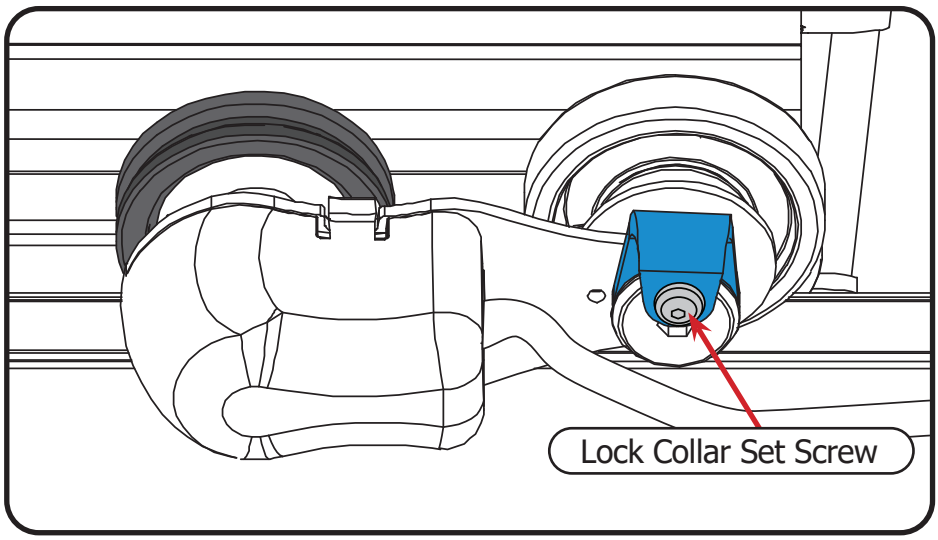

4. Use the 4 mm Allen wrench to loosen the **encoder screw** (shown in gray) and remove the encoder and wheel.

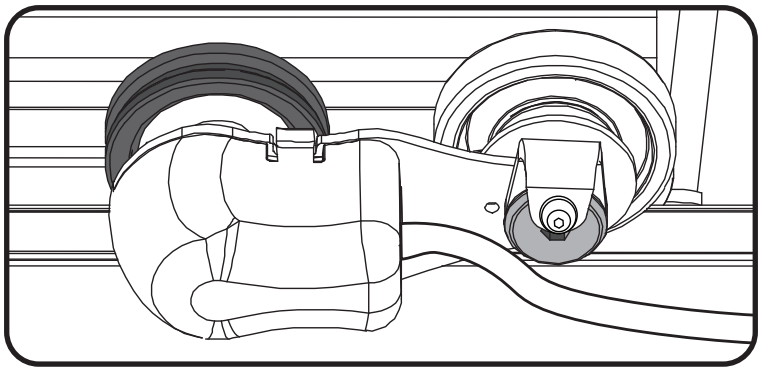

5. Remove the **plastic stop**, **wheel spacer**, **washer**, broken **encoder spring,** and **shoulder spacer** from the encoder.

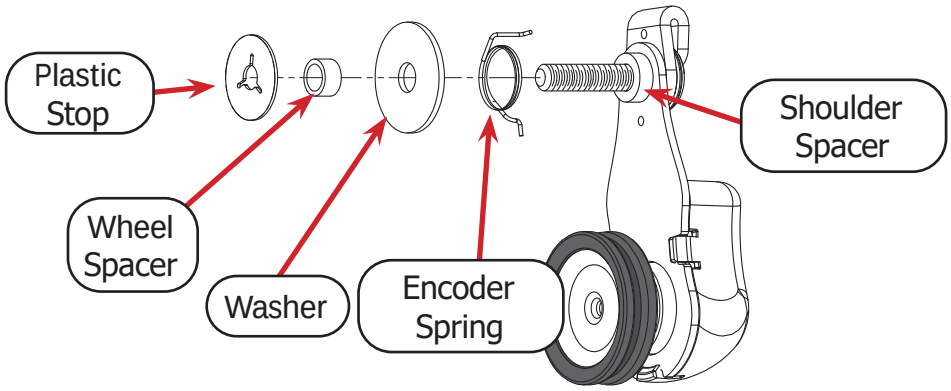

6. Pull on the **lock collar** to remove it from the encoder screw.

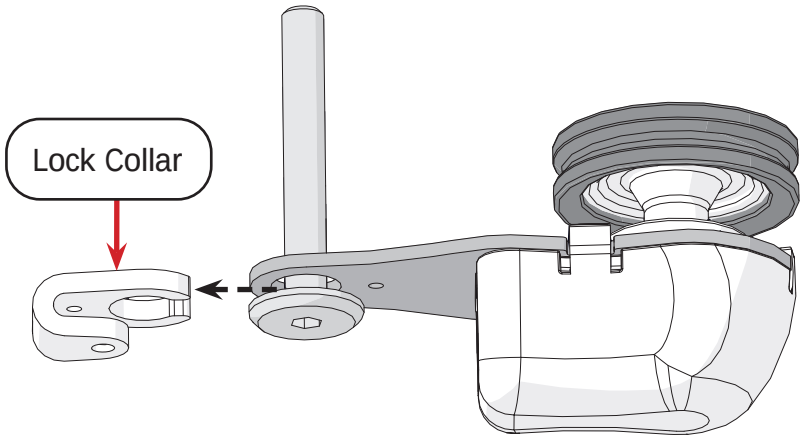

7. Place the replacement spring over the encoder screw, and insert the **short arm** of the spring all the way through the hole on the encoder base.

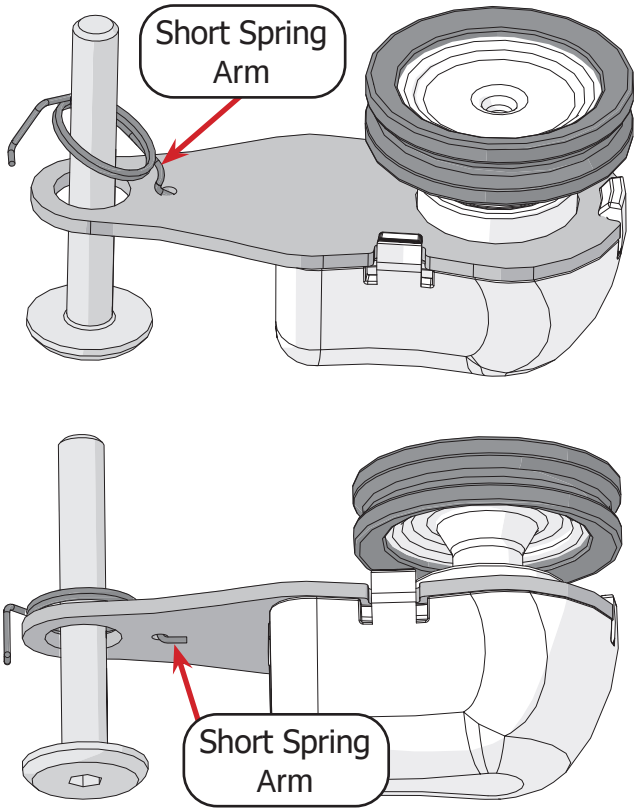

8. Place the **long arm** of the encoder spring arm into the hole on the encoder **lock collar**.

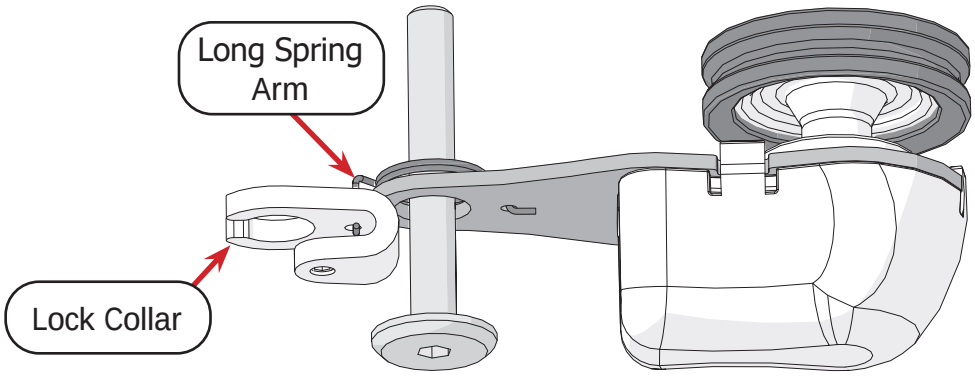

9. Without allowing the arm to slip out of the lock collar, rotate the collar until it wraps around the encoder bolt.

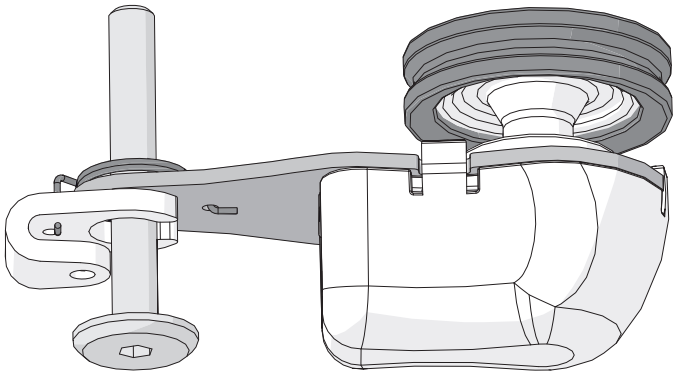

10. Adjust the screw and lock collar so the head of the screw slides in between the lock collar.

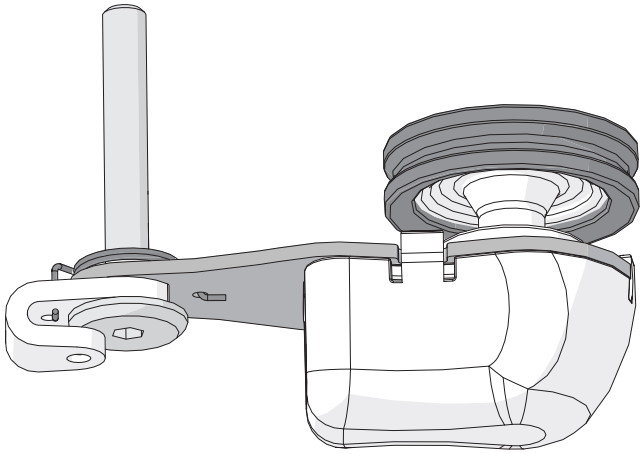

11. Slide the **shoulder spacer** onto the screw with the thinner side toward the head of the bolt.

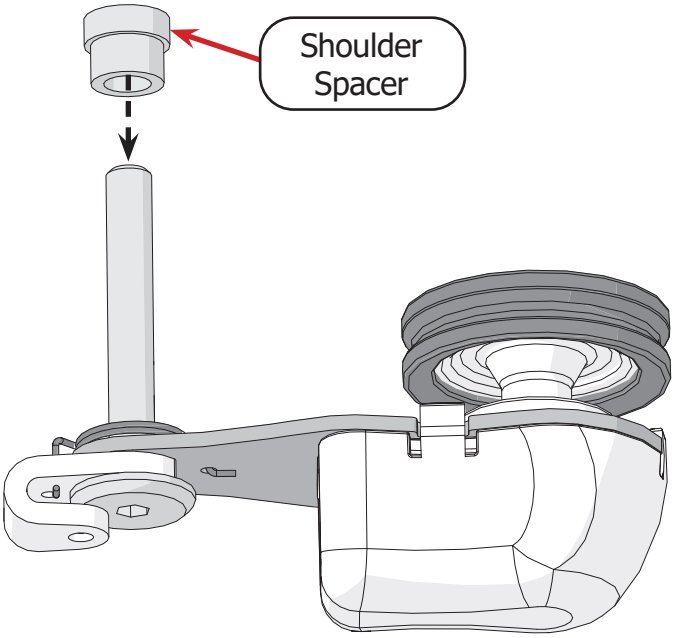

12. Next, place the **washer**, **wheel spacer**, and **plastic stop** onto the encoder screw.

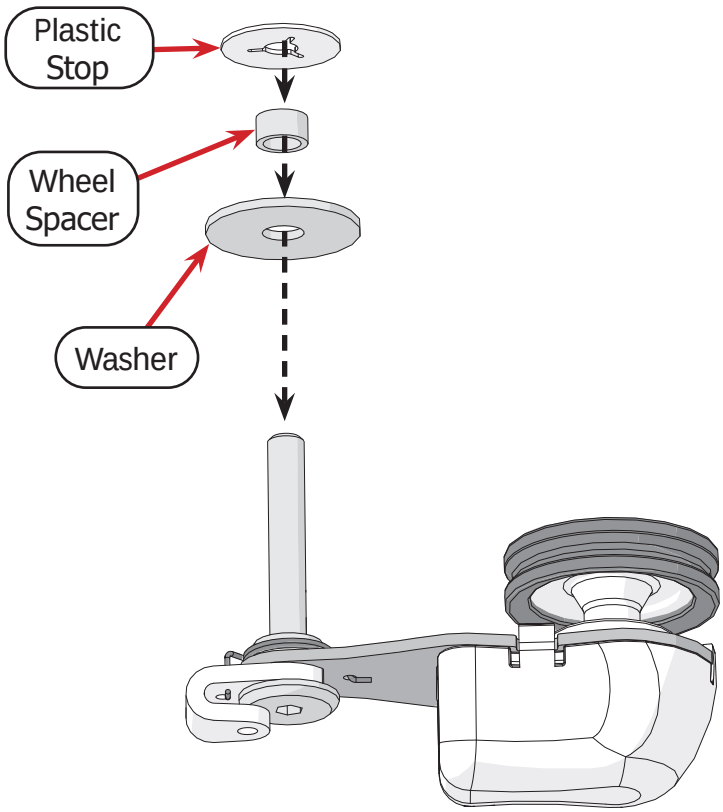

13. Complete the assembly instructions for the encoder you removed.
    - For the upper encoder (silver spring) assembly instructions, see "Assembling the Upper Encoder" on page 16.
    - For the lower encoder (black spring) assembly instructions, see "Assembling the Lower Encoder" on page 19.

Reinstalling the Hook Holder

Please speak to a Grace Company support technician before attempting these instructions.

Parts & Tools Needed:

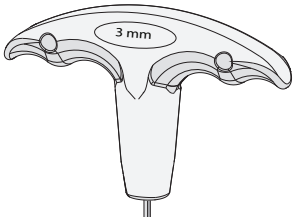

3 mm T-handle Allen Wrench

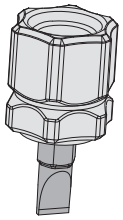

Flat-head Screwdriver

Removal Instructions

The hook holder prevents the hook assembly from shifting out-of-place when quilting. The following procedure should only be attempted if determined necessary by a Grace Company support technician. If done incorrectly, major machine problems can result.

1. Turn off the machine.
2. Rotate the hand wheel to raise the needle to the highest point.
3. With the 3mm Allen wrench, remove the **hook holder screw** (shown in gray) that attaches the **hook holder** to the machine.

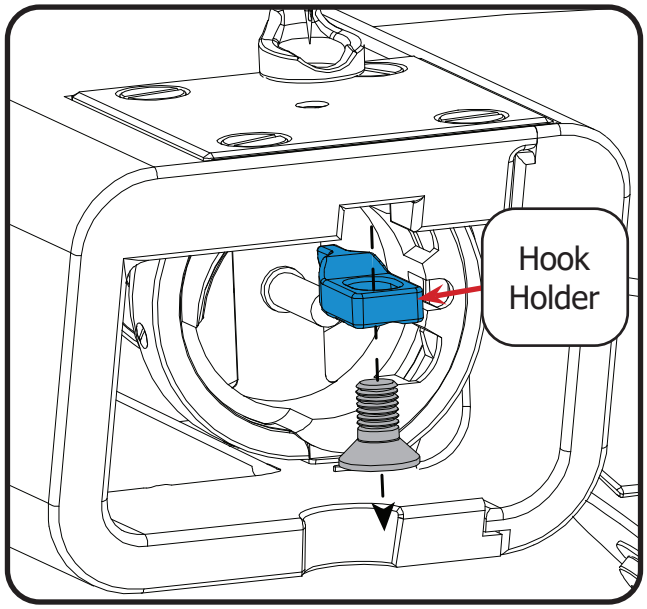

4. Slide the hook holder from the hook assembly.

Installation Instructions

1. Turn off the machine.
2. Rotate the hand wheel to raise the needle to the highest point.
3. Remove the needle plate using the flat-head screwdriver (see "Reinstalling the Needle Plate" on page 66 for detailed instructions).
4. Remove the bobbin case (see "Loading the Bobbin Case" on page 29).
5. Turn the inside part of the **hook Assembly** (shown in blue) so that the **positioning guide** is at the highest point.

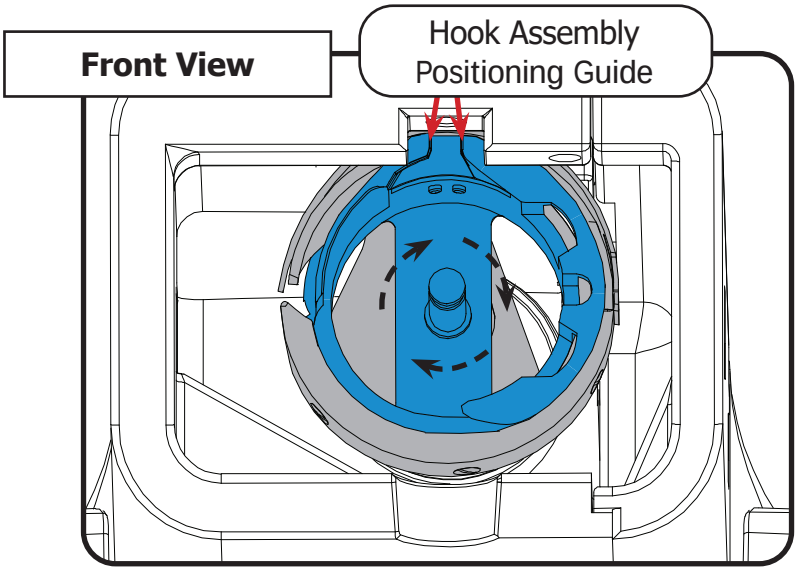

6. Slide the finger of **the hook holder** into the middle of the **hook assembly's positioning guide**.

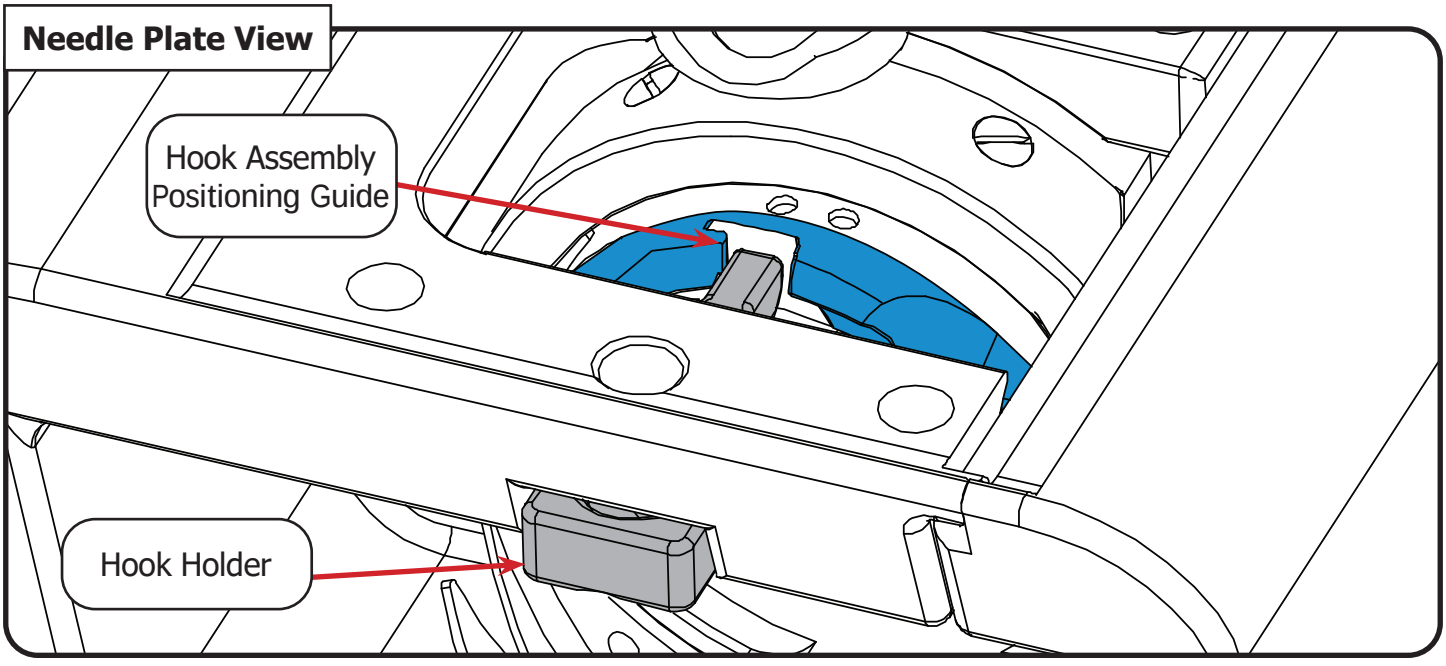

7. Attach loosely with the **hook holder screw**. Do not tighten.

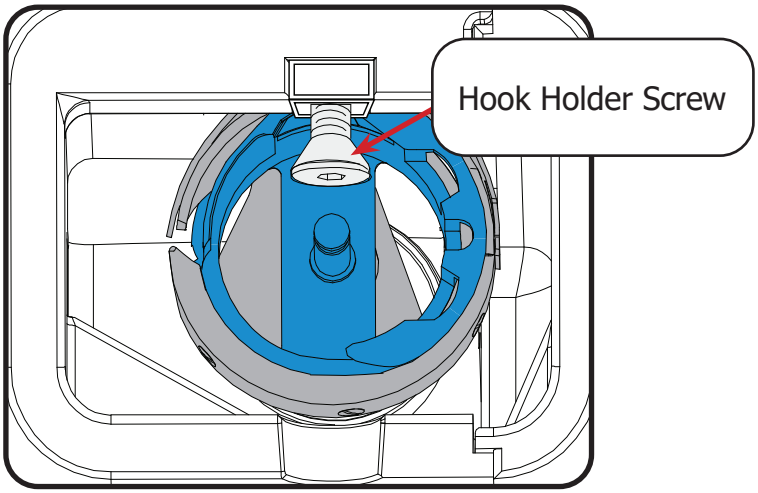

8. Align the **hook holder** with the inside edge of the **positioning guide** as shown below.

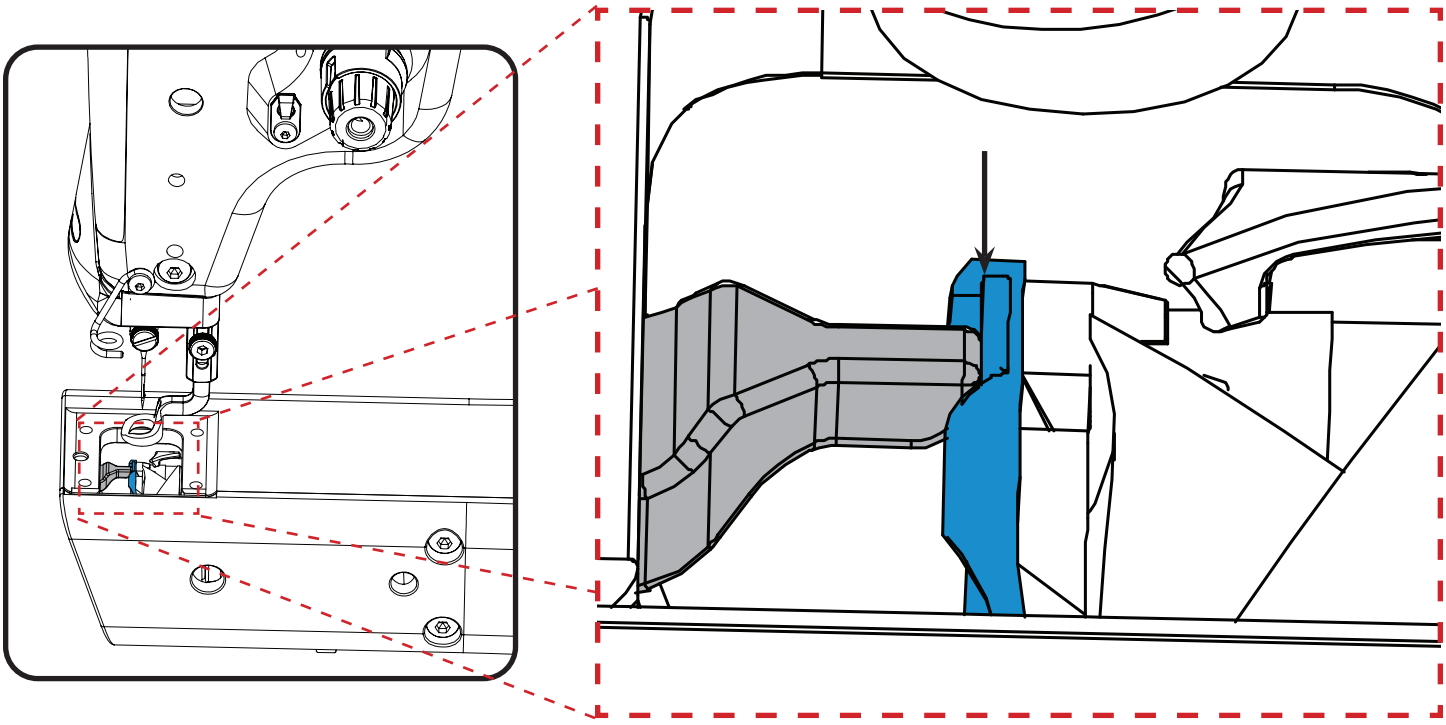

9. Tighten the hook holder screw to fasten the hook holder in place.

Timing the Machine

Please speak to a Grace Company support technician before attempting these instructions.

Parts & Tools Needed:

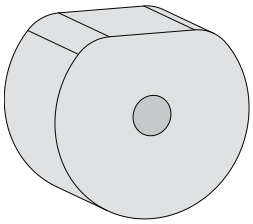

Timing Spacer

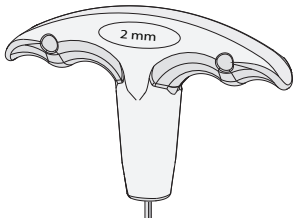

2 mm T-handle Allen Wrench

Instructions

Timing your machine aligns the needle and hook assembly so that they are in the correct places during the creation of a stitch. Improper timing can result in damage to the machine and needle, or make sewing impossible. Please consult with a Grace Company support technician before attempting to adjust the timing on your machine.

1. Turn off the machine.
2. Check that your needle is not bent or damaged, and that it is inserted all the way into the needle bar (see "Changing the Needle" on page 59).
3. Remove the bobbin case from the hook assembly (see "Loading the Bobbin Case" on page 29).
4. Remove the needle plate (see "Reinstalling the Needle Plate" on page 66).
5. Look into the machine's **timing cut-out** and turn the hand wheel. The hook assembly will rotate.

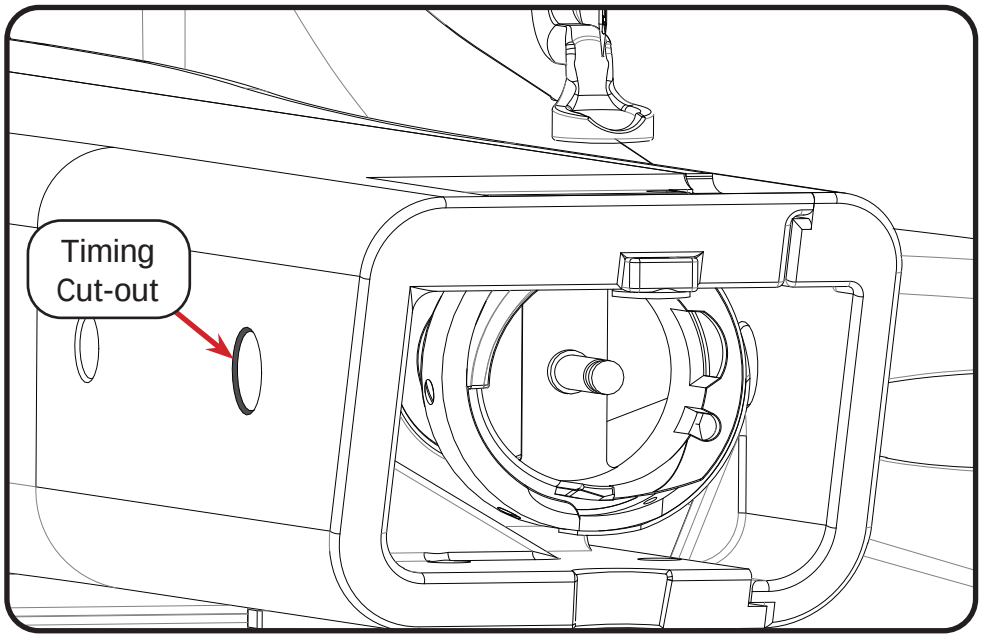

6. As each of the **3 set screws** aligns with the cut-out, loosen them with the 2 mm Allen wrench.

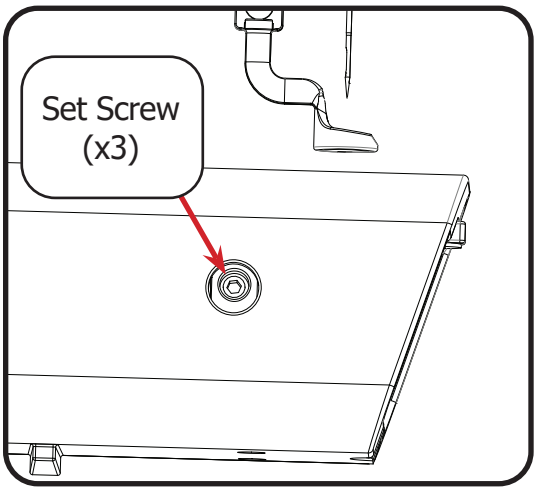

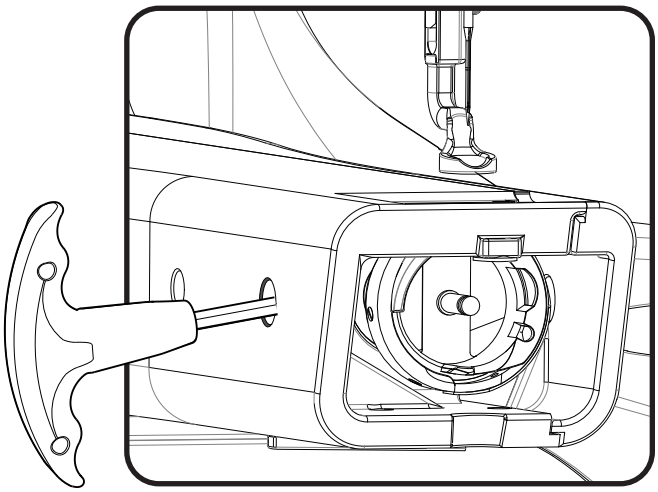

7. When all three set screws are loosened, the **outside** part of the hook assembly (shown in blue) will rotate by hand. Turn the outside part of the hook assembly so that the **hook** is at the top.

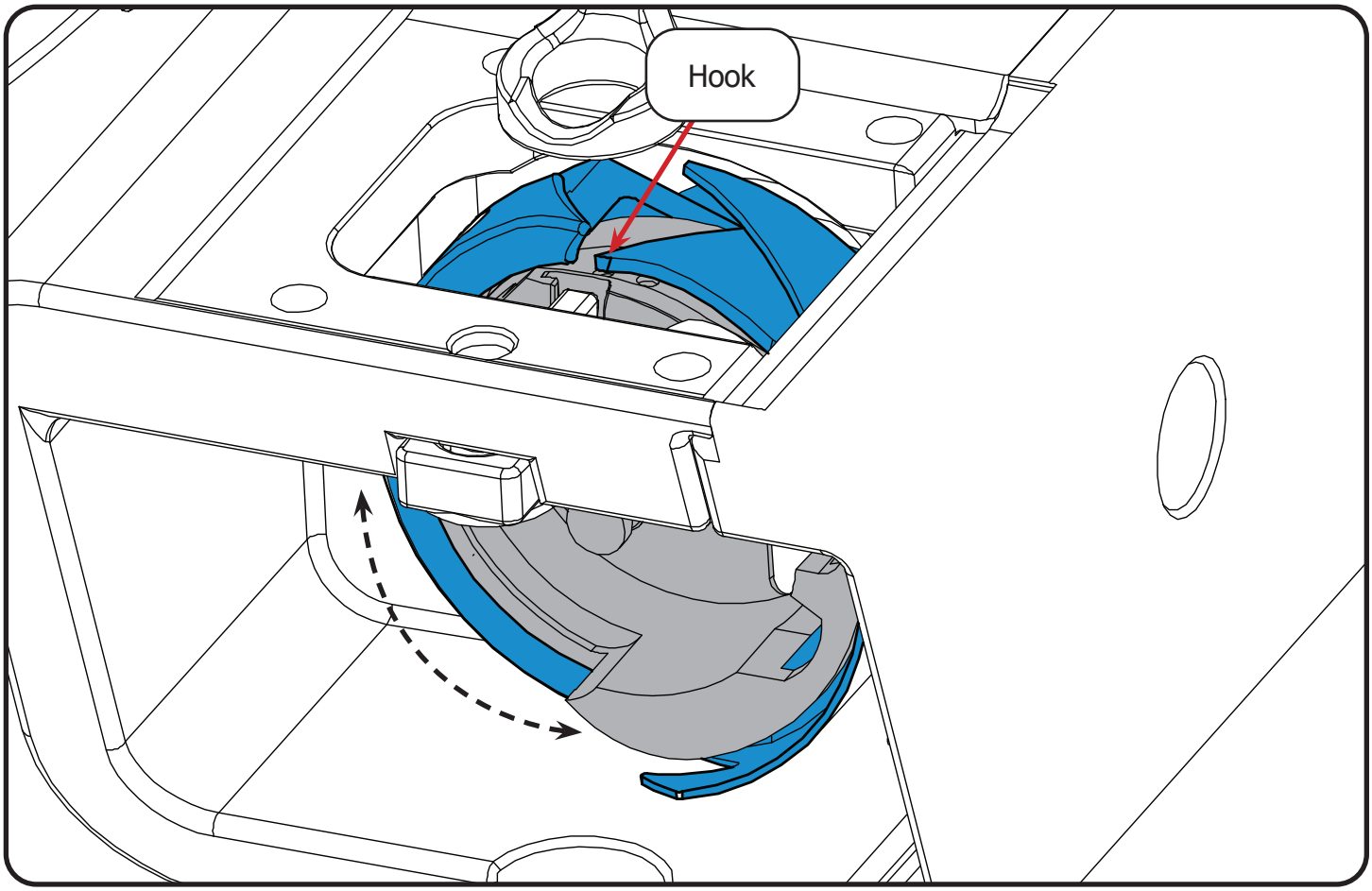

8. Carefully rotate the hand wheel to drop the **needle** (shown in gray) all the way to the lowest point. Continue rotating the hand wheel the same direction. The **needle** should begin to raise up.

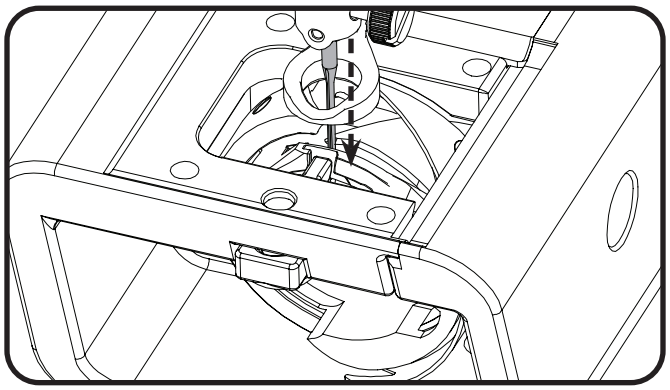

9. Stop raising the needle once is about level with the **hook** (shown in blue). Do not continue to raise the needle. If the needle reaches the top of its rotation (over the hopping foot), you will have to start over at step 8.

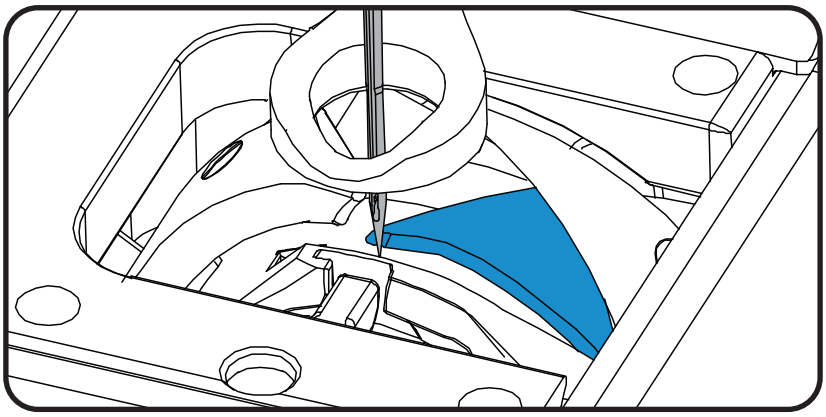

10. Slip the **timing spacer** (shown in blue) into the hook assembly.

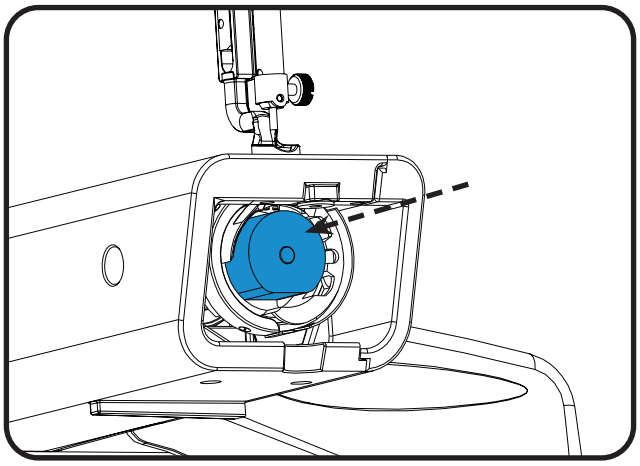

11. Turn the hand wheel the opposite direction to bring the **needle** back down until it rests on top of the **timing spacer** (shown in blue). Do not let the **needle** rise to the top before bringing it back down or you will need to repeat steps 8-11.

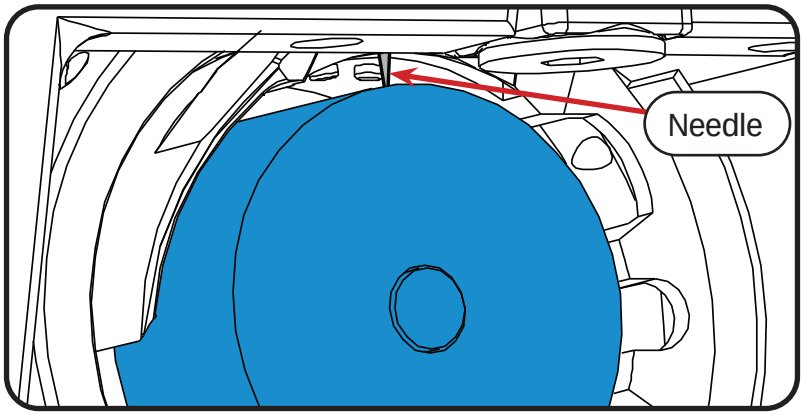

12. Position the tip of the **hook** (shown in blue) in the middle of the back of the **needle** (shown in gray). This is easier to see from the back of the machine.

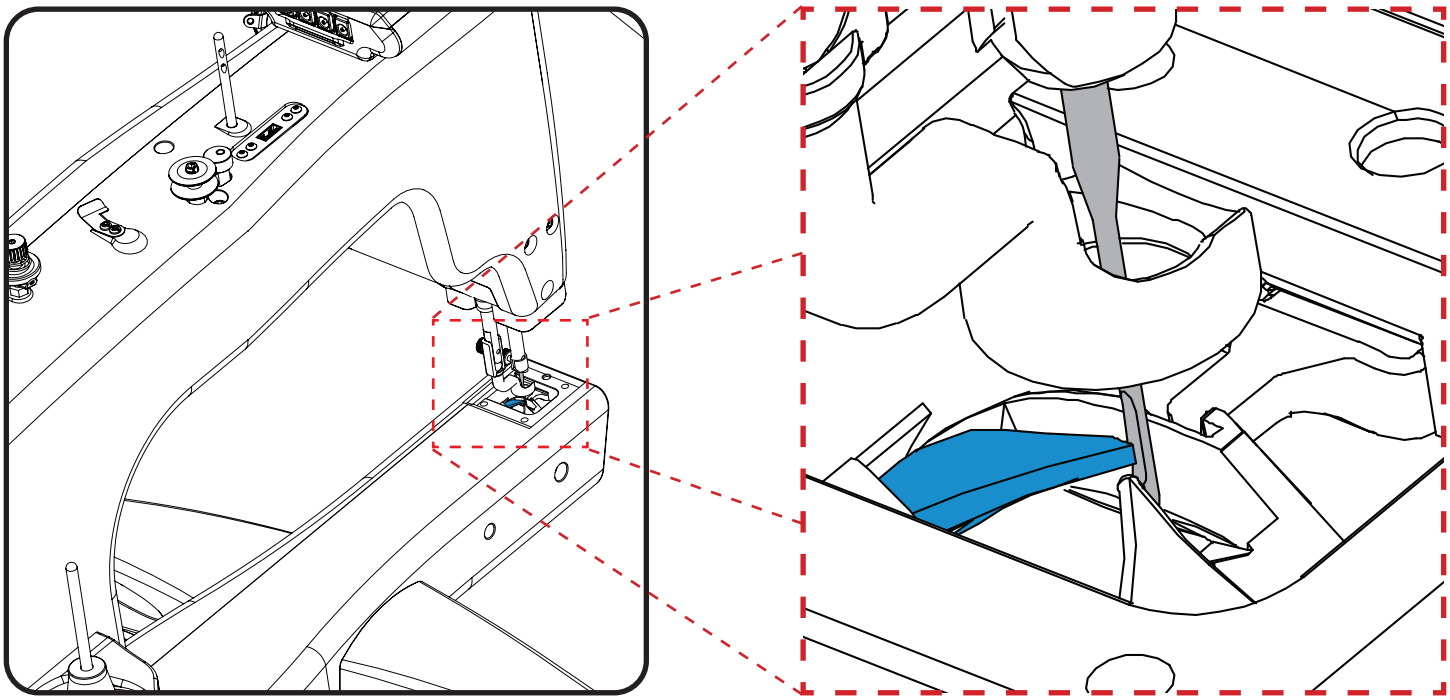

13. Tighten the set screw through the timing cut-out. Watch for bending in the needle and listen for a clicking sound that could indicate the needle is hitting the hook.
14. Turn the hand wheel a full rotation to ensure the needle does not hit the hook assembly at any point.
15. Tighten the two remaining set screws through the timing cut-out. The needle plate and bobbin case can be reinstalled.

Appendix

This section of the manual covers additional information on quilting with your machine.

Choosing Your Needle .....page 89

Choosing Your Thread .....page 91

Choosing Your Fabric and Batting .....page 94

Troubleshooting Guide .....page 95

Index .....page 97

Choosing Your Needle

Using the wrong type of needle, or using a needle that is bent, broken, or blunt, can damage the fabric, the machine, and needle. For best results:

- Use the recommended needle style for your machine (see below).
- Use the needle size appropriate for the weight and type of thread you're using (see below).
- Never use a needle that is dull, bent, burred, or damaged.
- Use multi-directional needles.
- Change your needle after 8 hours of use and at the beginning of each project.

Needle Style

The following are the recommended needle styles for your machine:

- DPx5 MR
- 135x17 MR
- DPx17 MR
- 135x17 SAN 11
- 3355 MR

Needle Sizes

Choose the correct needle size based upon the thread you're using. The larger the thread size, the lower the thread weight number, and the larger the needle needs to be. Generally, the finer the fabric, the finer the needle and thread that should be used.

Needle Size	Thread Size and Type
14 / 90	• Mono-filament • 100 wt. silk • 60 wt. polyester
16 / 100	• Mono-filament • 60 wt. polyester or cotton • 50 wt. polyester or cotton
18 / 110	• 40 wt. cottons and polyester • 30 wt. cotton and polyester
20 / 125	• 30 wt. or heavier of any thread

Needle Diagram

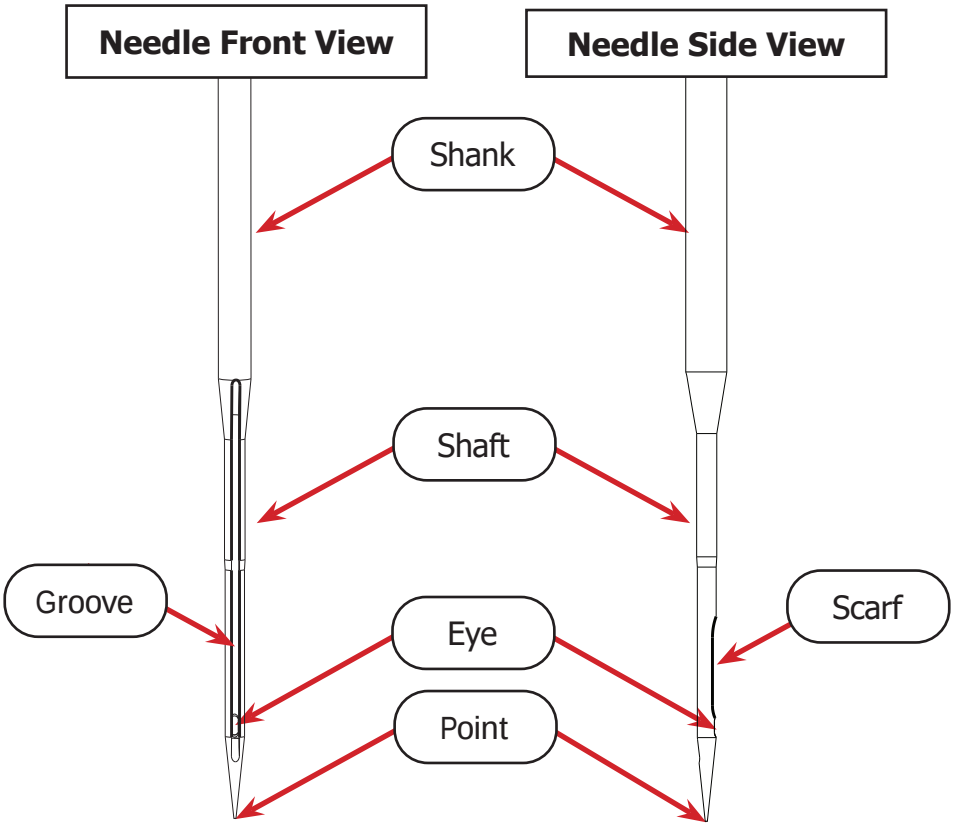

- **Shank:** Where the needle bar grasps the needle.
- **Shaft:** The long, narrow part of the needle. Needle size is based upon the diameter of the needle shaft.
- **Groove:** Reaching from the top to the bottom of the needle shaft, the groove allows thread to pass through the fabric more easily.
- **Eye:** Hole near needle point where the needle is threaded.
- **Scarf:** A cut-away on the back of the needle that allows the needle to fit smoothly within the hook assembly when quilting.
- **Point:** The sharp end of the needle. Choose the type of needle point to fit your project, and always replace your needle once the point is dull.

Choosing Your Thread

Choosing the best thread for your project is just as important as choosing the correct needle. Good thread is strong and can pass the "Yank Test" (see page 32). It holds its color well over time (colorfastness), and uses long fibers (extra-long staple) that resist pilling or creating lint.

Thread type and size determines not only which needle size to choose and what the thread tension must be set to on your machine, but also how visible the thread is on the project.

For best results:

- Use cone-style thread unless you have the thread spool accessory for your machine.
- Test the strength of thread before use with the "Yank Test" (see page 32).
- Practice using new thread on spare quilting materials to find the ideal thread tension. Write this information down and store it with your thread for later reference.
- Keep thread out of sunlight to prevent fading, and do not store near extreme temperatures.
- Select thread that is ideal for the fabric you're using (see the chart below).

Thread Type Guide

Threads can be multiple strands, called ply, spun together, or it can be a single ply. The fibers that make up the ply can come from many sources, but the most common threads used in quilting are made from cotton, polyester, and silk. The unique properties of each material make some threads better suited for use on some fabrics than others.

Thread Type	Ideal Fabric
Cotton	• Cotton • Linen • Rayon
Polyester	• Knit or Stretch • Woven synthetic
Silk	• Silk • Wool • Basting thread for all fabrics

Thread Size

The thickness of the thread is called the weight (wt.). This number is usually stamped on the edge of the top or bottom of the thread cone. Notice that as the thread becomes heavier and thicker, the weight decreases:

- 60 weight: Very thin, fine thread that will blend in to the fabric.
- 40 weight: Thicker thread that will show up on the fabric.

Tip: Not all manufacturers will have the same sizing method for their thread. Threads can be measured by weight, tex, denier, or scaling that is unique to its brand. Take the time to understand how the sizing works for a brand you're considering, and keep a few common sewing rules in mind:

- The thicker the thread, the larger the needle required. A needle that is too thin can shred thread.
- The thinner the thread, the smaller the needle should be. A needle that is too large will cause uneven stitching and can leave holes in the fabric.

Thread Processing

Sometimes thread is processed to change its properties. The chart below lists the processes common to cotton, polyester, and silk threads.

Thread Type	Processing
Cotton	• Mercerized: Treated to improve strength and colorfastness. • Glazed: Waxed or coated to give a polished appearance. The coating may rub off and build up in machine. • Gassed: Exposed briefly to a gas flame to burn away fuzz and lint, giving a smooth appearance.
Polyester	• Lubricated: Treated with lubricant to reduce friction. Avoid thread that is oily to the touch. • Bonded: Treated with resin to increase strength. This is typically used for heavy-duty applications, such as upholstery.
Silk	• No extra processing or treatments are typical for silk.

Recommended Thread

Finesse thread is specially-designed quilting thread by the Grace Company. It can be used with domestic (sewing) and quilting machines, and comes in 60 colors.

- 100% Polyester, 3-ply thread
- 1,500 yard mini-cone
- 50 wt.
- 110/18 or 100/16 quilting machine needle
- Topstitch 90/14 sewing machine needle

3283 Snow White	3293 Charcoal	2979 Rainbow	2989 Prism	2999 Cherry Blossom	3009 Deep Forest Green
3284 Pearl White	3294 Midnight Blue	2980 Sunny Spring Day	2990 Tropical Sunset	3000 Candy Apple	3010 Vintage Turquoise
3285 Light Wool	3295 Obsidian	2981 Strawberry Lemonade	2991 Aurora Lights	3001 Pomegranate	3011 Seaside Teal
3286 Ice Blue	3296 Marigold	2982 Pastels	2992 Mango Salad	3002 Dusk Rose	3012 Ocean Wave
3287 Pink Rose	3297 Leafy Green	2983 Raspberry Ice	2993 Camp Fire	3003 Cotton Candy	3013 Bright Blue Sky
3288 Lilac	3298 Blue Sapphire	2984 Circus Tent	2994 Mountain Jungle	3004 Tangerine Punch	3014 Lavender Blossom
3289 Light Sand	3299 Magenta	2985 Twilight Pink	2995 Desert Flower	3005 Grapefruit	3015 Amethyst
3290 Thicket Brown	3300 Amber	2986 Mauve Orchid	2996 Primary School	3006 Lemon Zest	3016 Mountain Mist
3291 Desert Tan	3301 Royal Purple	2987 Blueberries	2997 Mojito	3007 Light Spearmint	3017 Riverbed Slate
3292 Smokey Quartz	3302 Ruby Red	2988 King of Atlantis	2998 Florence	3008 Green Tea	3018 Canyon Shale

Choosing Your Fabric and Batting

Fabric

Some fabrics are not recommended for use with the quilting machine. Thick fabrics, such as denim or leather, have a lot of resistance that can bend or snap a needle, and misalign or break internal machinery. When quilting, avoid any fabrics that are difficult to pierce and take care that the fabric layers of the quilt are well balanced.

Batting

To choose the best batting for your project, consider the look and feel of the quilt that you're going for. Batting thickness is measured by its loft. A low loft batting is thinner and lighter, ideal for a quilt with a flatter appearance. High loft batting should be used if a fluffy, full quilt is the goal.

Typically, wool batting is the thickest batting while bamboo is the lightest. Wool provides the most warmth, followed by polyester, and then cotton.

Troubleshooting Guide

Issue	Cause(s)	Solution
Machine won't turn on.	Loose cables	Check that cables are plugged in securely (page 24).
	Machine is not turned on	Check power button is pressed down on right side (page 24).
	If problem persists, please contact a Grace Company support technician. Call **(800) 264-0644**.	
Stitches are skipped.	Damaged needle	Check needle (page 59).
	Machine improperly threaded	Check that all tensioners and guides were threaded correctly (page 32).
	Bobbin wound or threaded incorrectly	Check that the bobbin was inserted the correct direction in the case (page 29).
	Incorrect thread tension	Adjust top thread tension (page 48). Adjust bottom thread tension (page 30).
	Hopping foot incorrect distance from needle plate	Check distance with height gauge. Reinstall hopping foot if incorrect (page 63).
	If problem persists, please contact a Grace Company support technician. Call **(800) 264-0644**.	
Thread is breaking.	Damaged needle	Check needle (page 59).
	Incorrect thread tension	Adjust top thread tension (page 48). Adjust bottom thread tension (page 30).
	Machine improperly threaded	Check guides and tensioners for accidental double-wrapping (page 32). Thread mast should be directly over thread stands.
	Stitching in place too long	Keep machine moving to avoid stitch build-up in one place, or switch to regulated precise quilting mode (page 43).

Issue	Cause(s)	Solution
Thread is breaking.	Bobbin inserted incorrectly	Check bobbin is the correct direction in the case and inserted firmly (clicked) into the machine (page 29).
	Debris on tension discs	Clean the machine (page 55).
	Burred bobbin	Check bobbin for sharp edges. Contact your dealer to replace if needed.
	Needle plate is rubbing needle	Check that needle plate is centered and does not hit needle (page 66).
	If problem persists, please contact a Grace Company support technician. Call **(800) 264-0644**.	
Machine is running loud.	Machine and/or hook assembly needs oiling	Oil the machine and hook assembly (page 55).
	Bobbin winder is on	Check that Bobbin Cam is in Off position (away from bobbin stand).
	If problem persists, please contact a Grace Company support technician. Call **(800) 264-0644**.	
Thread is bunching up in hook assembly (bobbin case area).	Bobbin wound or threaded incorrectly	Check that the bobbin was threaded correctly and inserted the correct direction in the case (page 29).
	Machine improperly threaded	Check that all tensioners and guides were threaded (page 32).
	Incorrect thread tension	Adjust top thread tension (page 48). Adjust bottom thread tension (page 30).
	Bobbin case has damaged or missing spring	Check inside bobbin case to see spring. Contact your dealer to replace if needed.
	If problem persists, please contact a Grace Company support technician. Call **(800) 264-0644**.	

Index

A

alarm 52
assembly 11

B

basting setting 52
basting sewing mode....46
batting 94
beeping 52
bobbin....29
bobbin cam....6, 28, 62
bobbin case 29
bobbin tension 30
bobbin winding 26
bottom carriage 12
bottom thread tension 30
button test....74

C

cleaning 55
controls 42

D

default option 52
defaults 52
Diagnostics menu....72
display....23
display cable port 8, 23
display clip port....8, 23

E

electrical....5
encoder....16, 76
encoder port....8, 18, 21
encoder spring....76
encoder test 73

F

fabric 94
features....5
firmware....71
foot pedal port 8

G

grounding instructions 3
guide loops....27, 34

H

handlebar 42
hand wheel....6
hook assembly 7, 81, 84
hook holder 81
hopping foot 63
hopping foot height gauge....65
hours run 51

I

inserting the bobbin case....31

L

lamp 7
large thread tensioner 48
left-handed....52
loading the bobbin case....29
long encoder cable 21
lower encoder....19

M

machine dimensions 5
machine layout 6
machine settings....52
machine specifications 5
Main Menu....43
maintaining the machine....53
manual sewing mode....47
metric 52

N

needle 59
needle diagram 90
needle groove 90
needle magnet 61
needle plate 66
needle scarf 90
needle size 89

O

oiling and cleaning 54, 55
over-speed inidcator 52

P

parts 9
parts of the machine 6
power cable 24
power cable retainer 24
power port 8, 24
power switch 8, 24
Preferences menu 52
processed threads 92

Q

Quilt Motion control port 8
Quilt Motion tablet port 8

R

regulated sewing mode 44, 45
right-handed 52

S

safety instructions 2
sensor test 75
sewing mode 43
SPC 52
SPI 52
stitch count 51
stitches per centimeter 52
stitches per inch 52
stitches per minute 47
stitching speed 47
System Info screen 71

T

thread cutter 28
threading the machine 32
thread mast 22, 34
thread size 92
thread stand 6, 34
thread strength 32
thread tension 30, 48
thread type 91
timing cut-out 84
timing the machine 84
tools 10
Tools menu 50
top thread tension 48
total hours 51
total stitch 51
troubleshooting 95
turning the machine on/off 24

U

units 52
upper encoder 16
USB connector port 8

W

wheels 12, 17, 20
winding the bobbin 26

Y

yank test 32

Z

zip tie 21
zip tie mount 21

The Grace Company
2225 South 3200 West
Salt Lake City, UT 84119
Phone: 1-800-264-0644
Fax: 801-908-8888
www.graceframe.com